Nuclear Energy Agency

NEA/CSNI/R(2019)13

Unclassified **English text only**

5 October 2022

NUCLEAR ENERGY AGENCY
COMMITTEE ON THE SAFETY OF NUCLEAR INSTALLATIONS

NEA CODAP PROJECT TOPICAL REPORT

A REVIEW OF THE "POST-1998" EXPERIENCE WITH THERMAL FATIGUE IN HEAVY WATER AND LIGHT WATER REACTOR PIPING COMPONENTS

This document is available in PDF format only.

JT03504122

This document, as well as any data and map included herein, are without prejudice to the status of or sovereignty over any territory, to the delimitation of international frontiers and boundaries and to the name of any territory, city or area.

COMMITTEE ON THE SAFETY OF NUCLEAR INSTALLATIONS

The Committee on the Safety of Nuclear Installations (CSNI) addresses Nuclear Energy Agency (NEA) programmes and activities that support maintaining and advancing the scientific and technical knowledge base of the safety of nuclear installations.

The Committee constitutes a forum for the exchange of technical information and for collaboration between organisations, which can contribute, from their respective backgrounds in research, development and engineering, to its activities. It has regard to the exchange of information between member countries and safety R&D programmes of various sizes in order to keep all member countries involved in and abreast of developments in technical safety matters.

The Committee reviews the state of knowledge on important topics of nuclear safety science and techniques and of safety assessments, and ensures that operating experience is appropriately accounted for in its activities. It initiates and conducts programmes identified by these reviews and assessments in order to confirm safety, overcome discrepancies, develop improvements and reach consensus on technical issues of common interest. It promotes the co-ordination of work in different member countries that serve to maintain and enhance competence in nuclear safety matters, including through joint undertakings (e.g. joint research and data projects), and assists in the feedback of the results to participating organisations. The Committee ensures that valuable end products of the technical reviews and analyses are provided to members in a timely manner, and made publicly available when appropriate, to support broader nuclear safety.

The Committee focuses primarily on the safety aspects of existing power reactors, other nuclear installations and new power reactors; it also considers the safety implications of scientific and technical developments of future reactor technologies and designs. Further, the scope for the Committee includes human and organisational research activities and technical developments that affect nuclear safety.

List of abbreviations and acronyms

AA	Asea-atom (Sweden)
AFW	Auxiliary feed-water
AMP	Ageing management programme
AMPP	Association for Materials Protection and Performance (formerly NACE International)
ANVS	Authority for Nuclear Safety and Radiation Protection (Netherlands)
ASME	American Society of Mechanical Engineers
ASN	Autorité de Sûreté Nucléaire (Nuclear Safety Authority, France)
BR	Backing ring
BWR	Boiling water reactor
CANDU	Canada Deuterium Uranium
CBF	Cycle-based fatigue
CEA	Commissariat à l'énergie atomique et aux énergies alternatives (Alternative Energies and Atomic Energy Commission, France)
CEP	Concrete encased piping
CFC	Corrosion-fatigue cracking
CIPP	Cured-in-place-pipe
CODAP	Component operational experience, degradation and ageing programme
COG	CANDU owners group
CP	Cathodic protection
CRD	Control rod drive
CRDRL	Control rod drive return line
CSA	Canadian Standards Association
CSN	Consejo de Seguridad Nuclear (Nuclear Safety Council, Spain)
CSNI	Committee on the Safety of Nuclear Installations (NEA)
CUF	Cumulative usage factor
CVC	Chemical and volume control
CVCS	Chemical and volume control system
DHR	Decay heat removal
EAF	Environmentally assisted fatigue
EBS	Equivalent break size
ECCS	Emergency core cooling system
EDF	Électricité de France

ENSI	Eidgenössische Nuklearsicherheitsinspektorat (Federal Nuclear Safety Inspectorate, Switzerland)
EOL	End of Life
EPR	European Pressurised Reactor
EPRI	Electric Power Research Institute
ESF	Engineered safety features
FAC	Flow-Accelerated Corrosion
FAMOS	FAtigue-MOnitoring System
FW	Feed-water
GALL	Generic Ageing Lessons Learned
GRS	Gesellschaft für Anlagen- und Reaktorsicherheit (Germany)
HCF	High-cycle fatigue
HCTF	High-cycle thermal fatigue
HDPE	High-density polyethylene
HPSI	High-pressure safety injection
HTS	Heat transport system
IAEA	International Atomic Energy Agency
IAGE	CSNI Working Group on Integrity and Ageing of Components and Structures
ICES	INPO consolidated events database
IGALL	International GALL
IN	Information notice
INES	International Nuclear and Radiological Event Scale
INPO	Institute of Nuclear Power Operations (United States)
IRS	International Reporting System for Operating Experience
IRSN	Institut de Radioprotection et de Sûreté Nucléaire (Institute of Radiological Protection and Nuclear Safety, France)
ISI	In-service inspection
JSME	Japan Society of Mechanical Engineers
KTA	Kerntechnische Ausschuss (Nuclear Safety Standards Commission, Germany)
LB	Large break
LCF	Low-cycle fatigue
LCO	Limiting condition for operation
LOCA	Loss-of-coolant-accident
LPCI	Low-pressure coolant injection
LPSI	Low-pressure safety injection
LTO	Long-term operation
LWR	Light-water reactor
MB	Management board
MB-LOCA	Medium break LOCA
MFL	Magnetic flux leakage

MHI	Mitsubishi Heavy Industries
MRP	Materials reliability programme
MS	Main steam
NACE International	National Association of Corrosion Engineers International (now AMPP)
NDE	Non-destructive examination
NDT	Non-destructive testing
NEA	Nuclear Energy Agency
NEI	Nuclear Energy Institute
NESC	Network for evaluating structural components
NGS	Nuclear generating station
NRA	Nuclear Regulation Authority (Japan)
NRC	Nuclear Regulatory Commission
NSSS	Nuclear Steam Supply System
OE	Operational experience
OECD	Organisation for Economic Co-operation and Development
OPDE	OECD Pipe failure data exchange project
OPG	Ontario power generation
PHTS	Primary heat transport system (CANDU)
PHWR	Pressurised heavy water reactor
PIG	Pipeline inspection gauge
PORV	Pilot-operated relief valve (usually for reduce pressure of PWR pressuriser)
PrBWS	Pressure bearing water system
PRG	Project review group (of CODAP)
PSA	Probabilistic safety assessment
PVP	Pressure Vessels and Piping
PWR	Pressurised water reactor
PWSCC	Primary water stress corrosion cracking in dissimilar metal weld locations
PZR	Pressuriser
RCIC	Reactor core isolation cooling
RCS	Reactor coolant system
RFM	Rain flow method
RHR	Residual heat removal (Shutdown cooling)
RPS	Reactor protection system
RPV	Reactor pressure vessel
RCIC	Reactor core isolation cooling
RCPB	Reactor coolant pressure boundary
RHRS	Reactor Heat Removal System
RWCU	Reactor water clean-up
SB	Small break
SBF	Stress-based fatigue

SEAS	Slovenské Elektrárne AS (Electric utility company, Slovak Republic)
SG	Steam generator
STUK	Radiation and Nuclear Safety Authority of Finland
SÚJB	State Office for Nuclear Safety (Czech Republic)
SVTI	Schweizerischer Verein für technische Inspektionen (Switzerland)
TA	Volume control system in German´s BWR technology
TASCS	Thermal stratification, cycling and striping
TF	Thermal fatigue
TFFG	Thermal Fatigue Focus Group
TGSCC	Transgranular stress corrosion cracking
THERFAT	Thermal fatigue evaluation of piping system tee connections
TLAA	Time-limited ageing analysis
TT	Thermal transient
UNS	Unified numbering system
VT	Visual Testing
WANO	World Association of Nuclear Operators
WE	Westinghouse Electric
WGIAGE	Working Group on Integrity and Ageing of Components and Structures (NEA)
WWER	Water-Water Energetic Reactor (in Russian: VVER)

Table of contents

Executive summary **9**

1. Introduction **11**

1.1. Background and related work 11
1.2. Nomenclature 11
1.3. Objectives and scope 14
1.4. Disclaimer 15
1.5. Report structure and reading guide 16

2. Thermal fatigue phenomena **17**

2.1. Description of TF phenomena 17
2.2. Thermal stratification 18
2.3. Thermal cycling 18
2.4. Thermal striping 19
2.5. Valve in-/out-leakage 19
2.6. Thermal sleeve mixing 21
2.7. Thermal transient (TT) fatigue 22
2.8. Significant historical events 22

3. Safety significance of TF failures **25**

3.1. Consequences of TF failures 25
3.2. Considerations of TF in probabilistic safety assessment 26

4. Operating experience data review **29**

4.1. High-level database summary 29
4.2. Specific TF operating experiences 32

5. Conclusions and recommendations **64**

5.1. Conclusions 64
5.2. Recommendations 65

References **66**

Annex A OPDE/CODAP Bibliography **69**

Annex B Glossary of technical terms **75**

Executive summary

The implementation of the Nuclear Energy Agency (NEA) Component operational experience, degradation and ageing programme (CODAP) is the continuation of the 2002-2011 NEA Pipe failure data exchange project (OPDE) and the 2006-2010 NEA Stress corrosion cracking and cable ageing project (SCAP). In December 2017, 13 countries and economies (Canada, the Czech Republic, Finland, France, Germany, Japan, Korea, the Netherlands, the Slovak Republic, Spain, Switzerland, Chinese Taipei and the United States) agreed on a third term for CODAP (2018-2020). Sigma-Phase Inc. from the United States works as the operating agent of CODAP.

Since its inception in 2002, the operating experience with thermal fatigue mechanisms has been an intrinsic aspect of the technical scope of CODAP, which is a joint database project within the Committee on the Safety of Nuclear Installations (CSNI). This sixth topical report documents the results of thermal fatigue operating experience evaluations performed by the CODAP management board (MB). The technical emphasis is on the lessons learnt since the publication of the report "Specialist Meeting on Experience with Thermal Fatigue in light-water reactor (LWR) Piping by Mixing and Stratification" (NEA/CSNI/R(98)8).

This report highlights the need for close co-operation between plant designer and plant owner and, among plant personnel, between maintenance and operation staff to keep the risk of thermal fatigue under control. This sixth topical report addresses the accrued thermal fatigue operating experience since 1998 and the different programmes to monitor and mitigate thermal fatigue damage in nuclear power plant piping. The CODAP MB identified 254 pipe failures attributed to thermal fatigue. Of the total data subset, 31% (or 80 events) occurred post-1998. The insights and lessons learnt from evaluating the post-1998 operating experience is the subject of the sixth CODAP topical report.

High-cycle fatigue (HCF) failures are the most prevalent of fatigue events recorded in CODAP. It is noted that the number of thermal fatigue failures, especially HCF failures, decreased among CODAP participants after numerous international discussions led to projects in this area at the end of the 1990s.

The following actions appear to be most effective in preventing thermal fatigue failures:

- Identifying potential locations with a higher risk of stratification based on operating experiences and research results, especially locations with a risk of HCF.
- Implementing design modifications to decrease thermal fatigue degradation in the high-risk locations. Design modifications will vary depending on reactor design and could include flow circulation changes to avoid stratification, material changes to avoid quick deterioration, and process and procedure changes to avoid high temperature differences. Most participants mentioned the optimisation of the operating procedures based on operating experiences as an effective method to avoid fatigue events.

- Conducting online monitoring of critical locations during operation based on detection and screening of critical locations. The monitoring results should be continuously analysed together with the results of periodic inspections.
- Developing more precise NDE methods, techniques and procedures for periodic inspections.

The following international activities could be undertaken to support activities in each country to prevent thermal fatigue events:

- Developing more precise and consistent NDE methods, techniques and procedures for periodic inspections. An international benchmark to establish the reliability of detecting existing cracks could support this objective. The benchmark could include, for example, a comparison of the detection techniques, calibrating procedures of the equipment for the plant's environment, and ultrasonic examination procedures.
- Understanding the design modifications and online monitoring systems used to mitigate thermal fatigue and stratification. This information could be shared through international workshops on fatigue during the next five years, and then lead to the development of a consistent set of recommendations on best practices to manage thermal fatigue.

In summary, thermal fatigue damage continues to be of concern with respect to the safe long-term operation of nuclear power plants. The intended audience for this report includes ageing management programme (AMP) managers, in-service inspection (ISI) specialists, structural integrity engineers and nuclear safety specialists.

1. Introduction

Since 2002, the NEA has operated a joint event database project that collects information on passive metallic component degradation and failures. The scope of the database includes primary system piping components, reactor pressure vessel internals ("reactor components"), main process and standby safety systems, and support system (i.e. ASME code class one, two and three, or equivalent) components, as well as non-safety-related (non-code) components whose degradation or failure can have significant operational impact. With an initial focus on piping system components (the OPDE Project) the scope of the project in 2011 was expanded to also address the reactor pressure vessel and internals as well as certain other metallic passive components that are susceptible to damage or degradation. In recognition of the expanded scope, the MB approved the transition of OPDE to a new, expanded NEA component operational experience, a degradation and ageing programme (CODAP). The 2018-2020 work programme includes the preparation of topical reports to foster technical co-operation and to deepen the understanding of differences among participants in plant ageing management. The sixth CODAP topical report is concerned with the operating experience of thermal fatigue in heavy water and LWR piping systems. The focus of this report is on the post-1998 thermal fatigue operating experience.

1.1. Background and related work

Fatigue mechanisms have caused significant challenges to nuclear power plant operability, including forced reactor shutdowns and extended outages. Since the 1970s, significant research and development efforts have been devoted to better understanding the underlying physical phenomena in order to prevent reoccurrences and to the development of fatigue management programmes that ensure the long-term structural integrity of piping pressure boundary components. Recent operating experience data point to new technical challenges and the need for additional research. The new fatigue-related challenges include, but are not limited to, evidence of thermal fatigue in locations believed to have been mitigated 20 or 30 years ago through piping design solutions implemented to resolve potential cracking and through-wall leakages. Also among the new challenges are potential limitations or "gaps" in existing fatigue management guidelines that have resulted in "out-of-scope" inspection locations degrading and failing due to fatigue mechanisms.

High-level summaries of the fatigue-specific operating experience as recorded in CODAP are included in Figures 1.1 through 1.3. In numerous cases, piping failures attributed to fatigue mechanisms have had significant operational impact.

1.2. Nomenclature

Metallic fatigue is "the process of progressive localised permanent structural change occurring in material subjected to conditions which produce fluctuating stresses and strains at some point or points and which may culminate in crack or complete fracture after a sufficient number of fluctuations." The CODAP event database captures four basic types of fatigue mechanisms: 1) corrosion-fatigue (CF); 2) low-cycle fatigue (LCF); 3) thermal

fatigue (TF); and 4) high-cycle fatigue (HCF). Approximately 80% of the recorded fatigue failures recorded in CODAP are due to HCF of small-diameter butt welds and socket welds.

Figure 1.1. Fatigue of metallic piping components as documented in CODAP

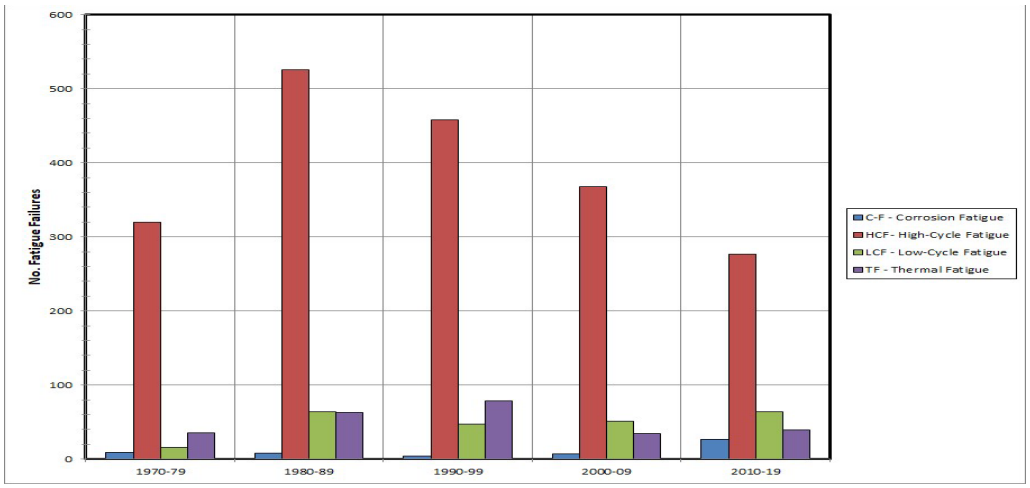

Figure 1.2. Operational impact of fatigue-induced pipe failures[1]

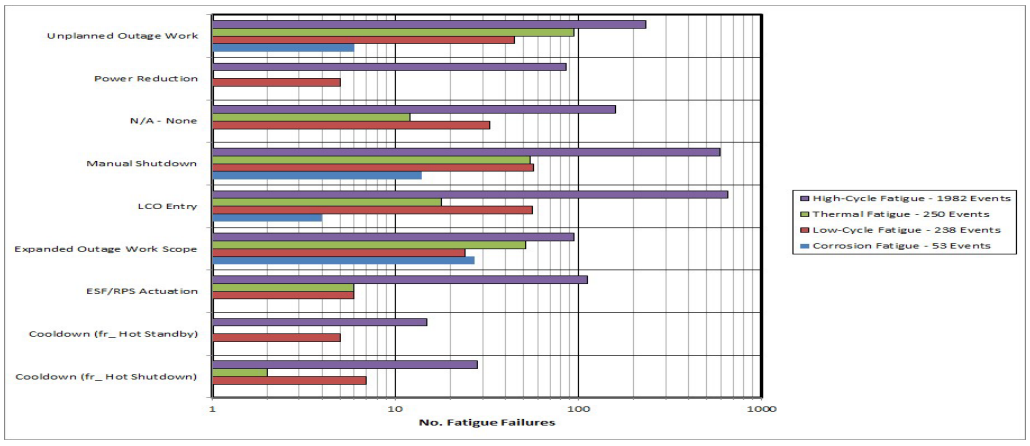

1. Note the logarithmic scale.

Figure 1.3. Fatigue mechanisms versus "other" degradation mechanisms

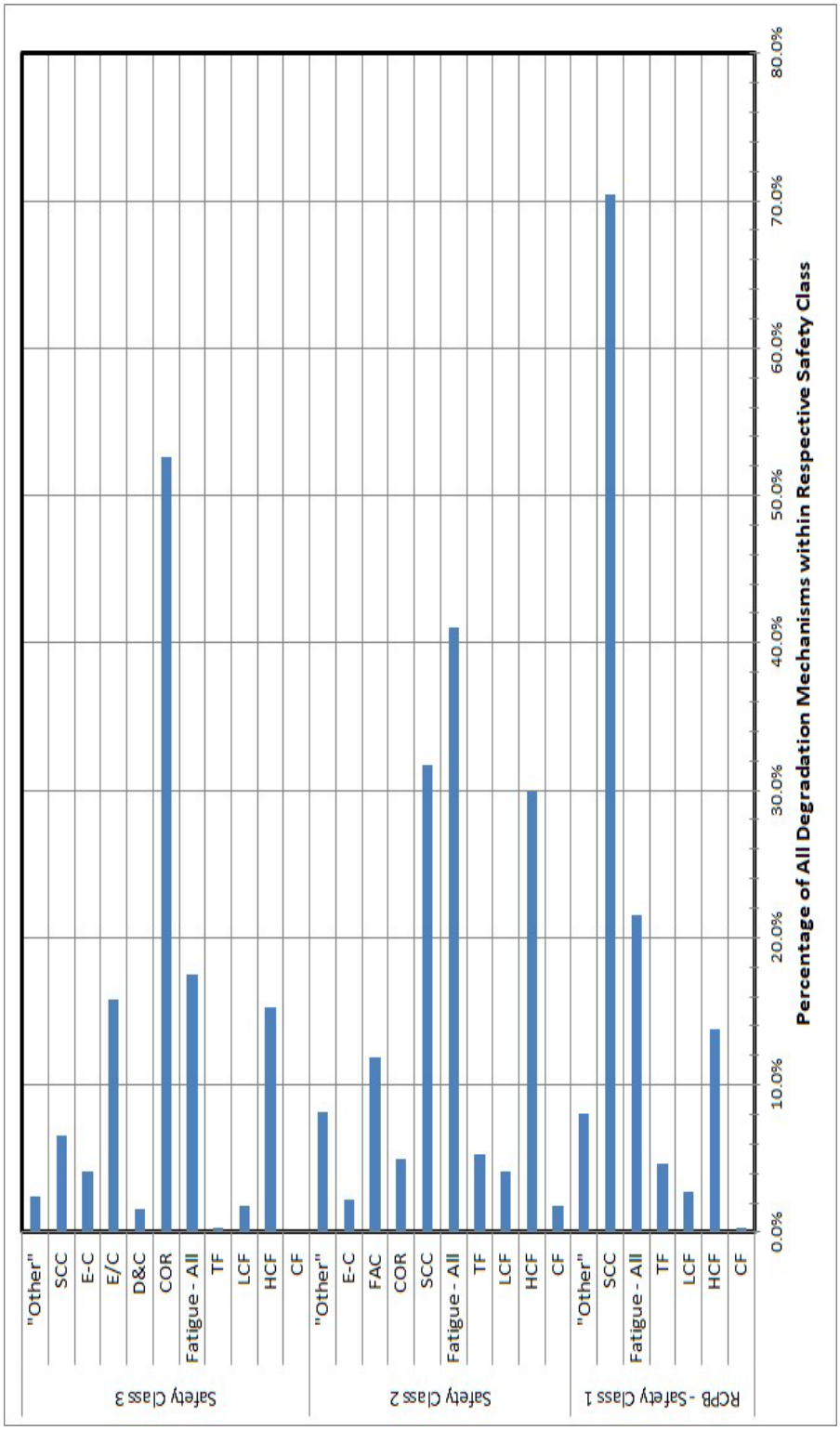

CF = Corrosion-Fatigue; COR = Corrosion ; D&C = Construction / Fabrication Flaw; E-C = Erosion-Cavitation; TF = Thermal Fatigue; E/C = Flow Assisted Corrosion (incl. Erosion-Corrosion, Flow-Accelerated Corrosion, Liquid Droplet Impingement Erosion); HCF = High-Cycle Fatigue; LCF = Low-Cycle Fatigue; SCC = Stress Corrosion Cracking.

Corrosion-fatigue, or "environmentally assisted fatigue", is the behaviour of materials under cyclic loading conditions and in a corrosive environment. It is considered to be made up of a region (or life) associated with the formation of an engineering-sized crack and a region consisting of the growth of this crack up to component failure. One category relates to the cycling life for the formation of a fatigue crack in a smooth test specimen, the so-called S-N fatigue properties (stress versus number of cycles). The second relates to the growth of a pre-existing crack. Laboratory test have shown that LWR coolant water can have a detrimental effect on both S-N fatigue properties and fatigue crack growth. Much lower failure stresses and much shorter failure times can occur in a corrosive environment compared to a situation where the alternating stress is in a non-corrosive environment.

In CODAP, the corrosion-fatigue event population is small, with 52 recorded events, most of which involve recordable/rejectable indications per ASME XI definitions. An example of material degradation induced by corrosion-fatigue is that found through metallographic examination of cracked code class two feed-water reducers at the now decommissioned Trojan nuclear power plant in 1987. Although not applicable to the CODAP work scope, the most significant corrosion-fatigue failure to date is the major primary coolant leakage that occurred at the Russian plant Kola unit 2 on 3 March 1994, when a 2-inch make-up system pipe ruptured.[2]

TF is due to the cyclic stresses that result from changing temperature conditions in a component or in the piping attached to the component. TF may involve a relatively low number of cycles at a higher strain (e.g. plant operational cycles or injection of cold water into a hot nozzle) or due to a high number of cycles at low stress amplitude (e.g. local leakage effects or cyclic stratification).

1.3. Objectives and scope

On 8-11 June 1998, France's Institut de Radioprotection et de Sûreté Nucléaire (IRSN) hosted the "Specialist Meeting on Experience with TF in LWR Piping by Mixing and Stratification" [NEA/CSNI/R(98)8] [1]. The meeting was prompted by numerous significant operational events and the lessons learnt from the root cause evaluations and the related R&D to better understand the underlying thermal-hydraulic phenomena. The meeting was co-sponsored by the World Association of Nuclear Operators (WANO) and the NEA Working Group on Integrity and Ageing of Components and Structures (WGIAGE) of the CSNI. This workshop was a precursor to multiple international initiatives to better monitor and understand TF and a starting point for a series of conferences on fatigue in reactor components as well as work programmes under the auspices of the WGIAGE. Please see the following documents for any additional details:

- "Proceedings of the International Conference on Fatigue of Reactor Components", August 2000, Napa, California, United States, NEA/CSNI/R(2000)24 [2].
- "Proceedings of the EPRI/USNRC/OECD International Conference on Fatigue of Reactor Components", July 2002, Snowbird, Utah, United States, NEA/CSNI/R(2003)2 [3].

2. International Atomic Energy Agency (IAEA), "Draft Report of a Consultants Meeting on a Primary Coolant Leak at Kola 2 NPP Due to the Rupture of a Make-up Pipe", WWER-SC-112, Vienna, Austria, 1995.

- "Proceedings of the Third International Conference on the Fatigue of Reactor Components", 3-6 October 2004, Seville, Spain, NEA/CSNI/R(2004)21 [4].
- "Thermal Cycling in LWR Components in NEA Member Countries", CSNI WGIAGE, NEA/CSNI/R(2005)8 [4].
- "Proceedings of the Fourth International Conference on the Fatigue of Reactor Components", 28 September-1 October 2015, Seville, Spain, NEA/CSNI/R(2017)2 [6].

Additionally, in 2003 the Network for Evaluation of Structural Components (NESC) set up a project involving both utilities and R&D organisations. Co-ordinated by the Institute for Energy at the European Commission Joint Research Centre in Petten (Netherlands), the NESC aims to produce a consensus methodology for assessing high-cycle thermal fatigue in piping components, with special attention to turbulent mixing phenomena at mixing tees in LWR systems. Completed in 2007, the work focused on two main aspects: 1) creating a database of service and mock-up data for improved understanding of TF damage mechanisms, and 2) developing a European multi-level TF damage assessment procedure that accounts for thermal-hydraulics, material properties, strain evaluation through finite element analysis, operating experience, fracture mechanics and ISI effectiveness. At the conclusion of the project, the NESC TF database included about 40 TF events [7].

This topical report documents the results of evaluations of the accrued TF operating experience since 1998 and the different programmes to monitor and mitigate TF damage in nuclear power plant piping. The CODAP MB has identified about 250 pipe failures attributed to TF. Of the total data subset, about 32% (or 80 events) occurred post-1998. The specific objectives of this report are:

- To provide a brief overview of significant historical events, i.e. events that occurred prior to 1999 and resulted in industry and regulatory actions.
- Based on the information stored in the CODAP event database, to summarise the insights and results of root cause evaluations of TF events that have occurred since the publication of NEA/CSNI/R(98)8 [1].
- Document recent examples of specific operational events attributed to TF, with an emphasis of remedial actions by industry and regulator.
- Determine the potential consequences of TF failures and any impacts on long-term operation.
- Provide examples of current TF management strategies, including the related non-destructive examination (NDE) procedures and NDE programme implementations.
- Demonstrate how to use the TF failure data in CODAP to draw qualitative and quantitative insights about structural reliability and integrity management.
- Provide some international-level conclusions and recommendations to help participants decrease the number of fatigue failures and the risks to safe operation.

1.4. Disclaimer

The CODAP project places strong emphasis on data quality, including the completeness and comprehensiveness of recorded events. Data quality is achieved through a formal validation process as articulated in a coding guideline. The roles and responsibilities with

respect to data submissions and data validation are defined in the CODAP operating procedures. The CODAP event database relies on information provided by respective MB members.

The results of the data processing and analysis that are presented herein are based as much as possible on the results of root cause analyses. However, the writing team for this topical report has not performed any reassessments of the findings related to the degraded passive components as documented in the root cause analysis reports that are embedded in the CODAP event database.

The CODAP MB is fully aware of the fact that the full root cause analysis documentation as prepared by an owner/operator or its subject matter experts is not normally disseminated beyond the industry and regulators. The CODAP coding guideline includes instructions for what "root cause information" to include in the database. As a guiding principle, the instructions provided state that any relevant information on a cause-consequence relationship is to be included. The co-ordinators in the respective countries/economies assume responsibility for the accuracy of the technical information that is input to the event database. Furthermore, the web-based database has provisions for uploading (or attaching) any available supporting information; e.g. laboratory reports, root cause analysis reports.

1.5. Report structure and reading guide

This topical report consists of six sections and three appendices. Section 2 includes a summary of the key TF phenomena. Also included in Section 2 is a summary of significant historical TF events. Section 3 explains the reasons why TF operating experience data is collected and analysed. Section 3 also addresses the potential safety significance of TF failures. Section 4 summarises the specific operating experiences in countries and economies. The summary and conclusions are documented in Section 5. Finally, a list of references is provided in Section 6.

Annex A is an OPDE/CODAP bibliography including references to database applications performed or sponsored by OPDE/CODAP member organisations since 2002. Annex B is a glossary of terms.

2. Thermal fatigue phenomena

Thermal fatigue (TF) is due to the cyclic stresses that result from changing temperature conditions in a component or in the piping attached to the component. TF may involve a relatively low number of cycles at a higher strain (e.g. plant operational cycles or injection of cold water into a hot nozzle) or due to a high number of cycles at low stress amplitude (e.g. local leakage effects or cyclic stratification). According to ASTM International[3], fatigue is "the process of progressive localised permanent structural change occurring in material subjected to conditions which produce fluctuating stresses and strains at some point or points, and which may culminate in crack or complete fracture after a sufficient number of fluctuations."

2.1. Description of TF phenomena

TF can occur by a number of mechanisms. When a piping system is exposed to a thermal transient, through-wall thermal gradient stresses occur, which is a function of the rate at which the pipe cross-section responds to sudden changes in temperature. These stresses are considered in the ASME code design stress analysis and, although they can cause a fatigue failure, they have been accounted for in the design. Piping thermal expansion, if constrained and occurring with sufficient cycles, can also cause fatigue damage and is considered. However, there are several fatigue phenomena that are not considered in the ASME code design stress analysis, including: 1) thermal stratification, 2) thermal cycling, 3) thermal striping, 4) valve in- /out-leakage, and 5) thermal sleeve mixing.

TF cracks initiate and grow because of alternating thermal loads. The loads cause tensional/compressive stresses due to gradients in thermal expansion. The micro-mechanism for crack initiation and growth by thermal loads is basically the same as for mechanical loads but the resulting crack morphology, in some respects, deviates from that of mechanical fatigue. A major difference between mechanical and TF is the crack pattern on the surface of the component. With few exceptions, TF cracking results in a large number of cracks. In addition, the crack orientation is distributed more randomly in TF cracking compared to mechanical fatigue due to the absence of a well-defined major stress direction under thermal loads. The cracks often occur in a fabric-like pattern known as "cobble stone" pattern. In the through-wall direction, TF cracks are characterised by a low tendency for crack branching and transgranular crack growth. The shape in the through-wall direction is in most cases straight, although bent and winding cracks have been observed. TF cracking in ferritic low-alloy steels and stainless steels at high temperatures causes oxidation of the crack surfaces and at the crack tip [8].

Adapted from References [9][10], the following sections provide additional details on the five TF phenomena, including examples of operating experience to help illustrate how these phenomena evolve.

3. Known until 2001 as the American Society for Testing and Materials.

2.2. Thermal stratification

Thermal stratification is a condition in which two streams of fluid of different temperatures flow in separate layers without appreciable mixing. When the flow rate is low, turbulence is low and the potential for mixing is minimal. The density of water varies with temperature. When streams of water at different temperatures meet, the warmer fluid, which is less dense, tends to seek the upper portion of the pipe, while the cooler fluid remains at the bottom. The two layers can remain in thermal equilibrium without mixing under a wide range of flow conditions. An indicator of whether stratification will occur is the Richardson number (Ri)[4]:

$$Ri = (g \times \Delta\rho \times ID)/(\rho \times \upsilon^2)$$

Where

g	= Standard acceleration due to gravity
ρ	= Density of fluid
$\Delta\rho$	= Difference in density of hot and cold fluid
υ	= Flow velocity
ID	= Pipe Inside diameter

The Richardson number does not address the effects of the piping configuration such as pipe length and slope or the mixing effects of elbows and tees. Nonetheless, the Richardson number is used as a screening criterion to assess the potential for thermal stratification. As a rule of thumb, when Ri > 4.0 a susceptibility exists for thermal stratification.

The effect of thermal stratification on the state of stress in the pipe is manifested in two ways. The difference in temperature between the top and bottom of the pipe causes greater thermal expansion at the top, resulting in bowing of the pipe. If the bowing is restrained, global bending moment stresses result. In addition, the interface between the two fluid layers causes a local stress in the pipe due to the thermal discontinuity across the pipe cross-section.

Thermal stratification has caused leaks in normally stagnant lines connected to the reactor coolant loop in safety injection systems, reactor coolant drain lines, a residual heat removal suction line, and an excess let-down line. In addition, stratification has caused cracking of steam generator feed-water nozzles and high piping displacements in pressuriser surge lines.

2.3. Thermal cycling

Thermal stratification by itself is generally not a concern for fatigue failure. However, if a mechanism for cycling exists, fatigue cracking can occur. There are several sources of thermal cycling:

4. Locations where there can be leakage past valves separating hot and cold fluids and regions where there might be intermittent mixing of hot and cold fluids caused by fluid injection are considered to be susceptible to thermal fatigue. Exceptions are pipe segments where the diameter is 25 mm or less or where the slope of the segment is 45° or more from the horizontal. According to the EPRI "Fatigue Management Handbook" (TR-104534), when these criteria are exceeded, additional evaluations can be performed to determine if the maximum temperature difference is greater than 10°C or Ri > 4.0.

- Changes in interface level. If, for example, stratification is caused by a leaking valve, if the rate of leakage varies, the hot-to-cold fluid interface level will move up and down. A point in the pipe cross-section near the interface can alternately be exposed to tensile and compressive stresses, as well as through-wall thermal gradient stresses, as the point cycles between cold and hot.
- Changes in temperature. If either the hot fluid or the cold fluid undergoes temperature fluctuations, the global bending moments will cycle and the stress distribution in the pipe cross-section will vary.
- Turbulence penetration. Turbulence penetration is secondary turbulence in branch lines caused by flow turbulence from high velocity fluid in the run pipe. As the reactor coolant loop flow passes branch lines of connecting systems, some of the hotter reactor coolant periodically enters the branch lines. The hotter fluid can interact with cold leakage fluid and cycle at a high frequency, depending on the distance from the run pipe. The length that the turbulence penetrates into the branch varies with flow conditions, temperature and the randomness of the fluid dynamics. The phenomena are not yet fully understood, but the maximum extent of turbulence penetration cycling length in the branch is approximately 25 branch pipes inside diameters.

Branch piping subject to turbulence penetration can be considered to consist of three regions. In the section closest to the run pipe, all of the pipe cross-section is near the hot temperature of the run pipe. In the second section, the run pipe temperature permeates into the branch pipe, but to a lesser extent, such that it stratifies at the top of the pipe. Combined with this are flow turbulence effects, which cause local thermal cycling at points in the pipe cross-section. In the third section of turbulence penetration, further away from the run pipe, only the effects of the run pipe temperature permeating into the pipe due to natural convection effects are present. There is no flow turbulence across the cross-section. However, cycling can still occur in this region, as the length of turbulence penetration may fluctuate, causing temperature variations over time in both the axial and radial directions. Piping that runs downward will behave differently than that which runs horizontally or upward from the RCS piping.

2.4. Thermal striping

Under certain thermal-hydraulic conditions, the interface between the hot and cold layers can become turbulent, leading to high frequency cycling over a narrow range in the vertical profile of the pipe. This phenomenon generally occurs when the relative velocities of the hot and cold fluids are high. Testing has demonstrated that the temperature amplitude vs. frequency of cycling can be represented by a spectrum. Fortunately, the higher frequency cycling occurs with the lower amplitude temperature changes, such that in most cases the contribution of striping to the overall fatigue usage is not large. In addition, striping stresses occur only at the pipe surface, so that even though striping can initiate a crack, it cannot cause the crack to grow through-wall. This phenomenon will generally not occur in nominally stagnant lines.

2.5. Valve in-/out-leakage

Two conditions need to be present for valve in-leakage to occur: 1) the isolation valve must leak, and 2) there needs to be a pressure gradient from the upstream to the downstream side of the isolation valve. As an example, the high-pressure safety injection system in

Westinghouse plants is driven by charging pump discharge pressure, up to about 17.6 MPa, which is higher than reactor coolant system pressure, about 15.5 MPa. The case of concern is when the leakage is into an unisolable, normally stagnant portion of the piping system, and the leakage interacts with the hot water from the reactor coolant system. The colder leakage fluid can interact with turbulence penetration from the RCS and cause cycling at a high frequency, depending on the distance from the leaking valve to the RCS pipe.

The US NRC Bulletin 88-08 "Thermal Stresses in Piping Connected to Reactor Coolant Systems"[5] was issued in response to a leak that occurred at the Farley plant in 1987. The Farley leak was located in the heat-affected zone of the weld between the first elbow and the horizontal run upstream of the RCS cold leg nozzle. The line rises vertically from the cold leg, and then turns horizontally to the check valve. The crack location was about 1 m from the RCS cold leg nozzle. The orientation of the crack was circumferential, in the bottom third of the pipe. Farley is a 3-loop Westinghouse plant. The cause of the crack was the interaction of hot RCS fluid with the cold valve leakage fluid that had stratified at the bottom of the pipe. Temperature monitoring performed subsequent to cracking indicated that downstream of the check valve, the difference in temperature between the top and bottom of the pipe was 102°C. The bottom temperature was not constant; the amplitude of the cycling was 21°C with a cycle period between two and 20 minutes. Other leaks of a similar nature have occurred in the safety injection system due to valve in-leakage at Tihange unit one (Belgium) in 1988 and Dampierre unit 2 in 1992.

With respect to valve out-leakage phenomena, the leak path is from the reactor coolant loop, through an unisolable branch line, to a lower pressure system. The valve leak could be either past the isolation valve seat or past the stem packing and out the leak-off line, if one is present. Out-leakage stratification is generally steady with a limited number of cycles. Bulletin 88-08 Supplement 3 described an unisolable piping system leak that was caused by valve out-leakage.

In 1988, a leak occurred in the RHR suction line at Genkai unit one (a 2-loop WE/MHI pressurised water reactor [PWR] design). The crack location was in the weld at the first elbow downstream of the reactor coolant loop hot leg connection, between the vertical drop and the horizontal run. The crack orientation was circumferential and originated in the heat-affected zone of the weld. The crack was located at the top of the pipe. A second crack was found at the top of the weld between the horizontal pipe and the isolation valve. An evaluation of the fatigue striations indicated that the stress levels had been about 10 to 15 ksi and the number of cycles to failure was 10^4 to 10^5.

The RHR pipe was eight inches in diameter, Type 316 stainless steel. The distance from the hot leg to the leak location was nine feet (L/D = 13.5) and the distance to the isolation valve along the horizontal run was 11 feet (L/D = 17). Examination of the fracture surface and other root cause analyses indicated that the cause of failure was TF. The crack initiated at a location with a stress concentration factor of about three, and had been subjected to thermal stratification cycling. The isolation valve did not show any evidence of leakage past the seat. However, there was evidence of leakage at the connection of the valve leak-off line to the lantern ring. The purpose of the lantern ring is to provide a means to conduct leakage out from the stem packing.

The NSSS vendor, Mitsubishi Heavy Industries (MHI), conducted tests that demonstrated that even a small amount of leakage through the stem packing gland could cause thermal

5. www.nrc.gov/reading-rm/doc-collections/gen-comm/bulletins/1988/bl88008s3.html.

stratification in the horizontal pipe. However, such stratification was steady, without cycling. Further testing discovered that the disc of the isolation valve normally rests against the downstream side of the seat, leaving a small gap on the upstream side. When the packing gland leaks, hot water from the RCS passes by the disc and the thermal expansion of the disc closes the gap, which stops the leak. After a while, the disc cools, the gap reforms and leakage begins again. This intermittent leakage mechanism was concluded to be the source of the thermal stratification cycling. The tests demonstrated that the upper pipe temperature fluctuated by 40°C, and the period of the cycling was 20 minutes. There had been a temperature sensor installed on the leak-off line to detect leakage but because the line was not insulated, it did not detect the hotter flow.

As a corrective action, the valve disc position was raised so that there would always be a gap between the disc and the upstream side of the seat. Thus, if there is packing leakage, it will be constant with no thermal cycling. Although there was no evidence of it, the thermal stratification cycling could possibly have also been caused by turbulence penetration from the RCS hot leg. The vertical distance from the hot leg to the crack of 13.5 inch pipe diameters is in the turbulence penetration range, and variations in the turbulence penetration length could have intermittently stratified the fluid in the horizontal section [1].

2.6. Thermal sleeve mixing

PWR plants of the Babcock & Wilcox (B&W) design have combined make-up/high-pressure injection lines. Most plants use one line for normal make-up, with one plant using two. The make-up does not pass through a regenerative heat exchanger, so the flow temperature is much colder than the RCS temperature. A thermal sleeve is provided in the nozzle to protect the immediate area from TF. However, if there is any problem with the sleeve, turbulent mixing of fluids with a large temperature difference can result.

In 1982, a crack in the make-up nozzle occurred at the Crystal River plant [11]. The nozzle is of carbon steel 2.5 inches in diameter and is shop welded to a safe-end made of type 316 stainless steel. The safe-end is then field welded to the 2.5-inch, type 316 stainless steel make-up line. A thermal sleeve of type 316 stainless steel was installed in the nozzle by a mechanical press fit.

The crack was in the safe-end to pipe weld. The orientation was circumferential, 140° around on the outside surface. There were actually two separate cracks: one initiated on the inside due to TF caused by turbulent mixing of the hot reactor coolant and the cold make-up water; the other originated on the outside and was believed to have been caused by mechanical vibration. Other cracks were found in the safe-end, check valve and the thermal sleeve.

The thermal sleeve was found to have been loosened, and there was a gap between the sleeve and the safe-end. The gap allowed cold make-up flow to mix with the RCS fluid on the nozzle surface, and the resulting flow-induced vibrations caused additional wear of the thermal sleeve. However, there was no thermal stratification. Five of the other B&W plants also found cracking at this location although it was not through-wall. The US NRC issued the Generic Letter 85-20, Resolution of Generic Issue 69: High-pressure injection/make-up nozzle cracking in Babcock and Wilcox Plants and the B&W Owners Group developed a corrective action programme to address the issue. An improved thermal sleeve design was subsequently developed. It included a hard roll and longer contact area to assure a tight fit of the nozzle and prevent flow-induced vibrations. An augmented, periodic ISI programme to detect gaps behind the sleeve was also recommended.

Another through-wall crack occurred at Oconee in 1997 in the pipe to safe-end weld [11]. Similar to Crystal River, the cause of the cracking was turbulent mixing of the cold make-up flow with the hot RCS flow. Again, a gap behind the sleeve allowed the RCS fluid to penetrate back past the safe-end. Variations in the make-up flow rate and high frequency turbulence effects resulted in thermal cycling at the crack location. It was postulated that the sleeve had been loosened by differential thermal expansion cycling due to back flow with partial pump operation and evidence suggested that further wear occurred due to flow-induced vibrations. For corrective actions, the new thermal sleeve design was installed, and warming line flow was increased to minimise flow isolations. Prior to the weld leak, the combination stop-check valves were replaced by separate stop and check valves, thus removing a known condition for back-leakage.

2.7. Thermal transient (TT) fatigue

The number of TT fatigue cycles that will cause fatigue damage depends on the magnitude of the alternating stress (or strain) incurred during each transient loading cycle. The endurance limit represents the cyclic stress amplitude that can be applied indefinitly without causing fatigue damage. From a practical standpoint, the endurance limit is typically assigned to the alternating stress amplitude associated with 10^6 or 10^7 cycles on the material stress-cycle curve. A specific operational thermal and pressure loading condition identified in the TT degradation mechanism assessment is not considered fatigue significant if the allowable number of cycles associted with the maximum alternating transient stress is greater 10^6. The CODAP event database includes two recent (2018) examples of recordable circumferential weld flaws attributed to TT fatigue. The affected areas were in the charging pump discharge lines.

Areas considered susceptible to TT fatigue include pipe segments where there is relatively rapid cold (hot) water injection with delta temperature greater than 65°C for carbon steel pipes and 90°C for austenitic stainless steel pipes. When these temperature changes are exceeded, additional evaluations can be performed to determine if delta temperature is greater than delta temperature allowable.

2.8. Significant historical events

Five TF events of historical significance are summarised below. The information is extracted from the CODAP event database. The term “significance” is a reflection of combinations of operational impact, and the extent to which industry and regulatory agencies responded in terms of finding acceptable solutions to the long-term fatigue management.

- Olkiluoto unit one (OL-1) major pressure boundary failure. On 29 August 1979 a DN150 pipe in the reactor water clean-up (RWCU) system fractured, resulting in a spill of 5 000 kg of primary water outside containment. The through-wall crack in the pipe was 150 mm long and 2 mm wide. The unit was in the commissioning phase of operation, and the pipe fracture resulted in reactor trip and containment isolation. The rupture occurred in a mixing tee between the RWCU and residual heat removal (RHR) systems. The apparent cause of the failure was thermal stratification, but the underlying cause was an operator error due a deficiency in the system operating procedure. The fatigue crack evolved because of plant operation, with an intermediate basic state of RWCU valve 331-V19 leaving two flows with considerably different temperatures to mix incompletely. OL-1 is a BWR designed

by Asea-atom (AA). Additional details on the AA NSSS design are included in Section 4.2.5.

- Through-wall TF cracking of make-up nozzle safe-end weld at Crystal River 3. On 21 January 1982, an unidentified 3.8-L/min leak was found while the plant was in operation. Visual inspection revealed that the leak was associated with the MU/HPI line. As the leak was unisolable, the plant promptly proceeded to cold shutdown. Inspection of the safe-end revealed that a through-wall, circumferential crack was present in the safe-end-to-check valve weld. The circumferential extent of the crack at the outside surface was 140 degrees. The crack consisted of two separate cracks: one initiated at the outside diameter and another initiated at the inside diameter. The one on the outside surface was initiated and propagated by mechanical fatigue caused by pipe vibrations. The one on the inside surface was initiated and propagated by TF caused mainly by turbulent mixing of hot reactor coolant and cold make-up water. Thermal shocks during periodic make-up water additions could have played a role in causing the fatigue damage.

- Through-wall cracking in the safety injection line at Farley-2 and Tihange-1. In 1987, a leak occurred inside the containment of Farley-2 during normal power operation. The leak was found in the unisolable location of the safety injection line. The crack was on the inside surface of the weld and extended approximately 120 degrees circumferentially around the underside of the pipe. About 25 mm of this crack was through-wall. The crack was caused by TF and had developed slowly. The leak rate was 2.7 L/min. The monitoring of circumferential temperature distribution at the failed weld at Farley-2 carried out after the leak event showed spatial and temporal fluctuations in the temperature. The circumferential temperature difference at the weld varied from 3°C to as high as 120°C. Based on these measurements, it was assumed that the temporal variations resulted from intermittent action of the check valve. There were, however, no test results supporting this assumption. Experiments performed in Japan simulating the Farley event showed that the temperature fluctuation in the safety injection line was not caused by the intermittent action of the check valve (i.e. fluctuation in the flow rate) but by the mixing of low temperature leakage flow with high temperature turbulent flow in the pipe downstream of the check valves. The Japanese test results also concluded that the thermal cycling is severe enough to cause HCF failure of the piping material when the leak flow rate is equal to or larger than 100 kg/hr, as measured at Farley-2; see pp 229-240 in reference [1]. A similar occurrence caused cracking in both base metal and welds of Tihange-1 on 18 June 1988. Both Farley-2 and Tihange-1 are similarly designed Westinghouse-3 loop plants.

- Three Mile Island 1 RCS cold leg drain line failure. On 9 September 1995, a leak occurred in a cold leg drain line. The through-wall crack was located in the weld between the first elbow downstream of the reactor coolant loop nozzle and the horizontal pipe run. At the time of the leak, the plant had been operating for 21 years and was at 0% power, beginning a cool-down. The leak rate was 20 “drops” per second. The pipe routing is down 14 inches vertically from the cold leg, then 7.3 feet horizontally to the first valve. The vertical run is 1.5 inches diameter pipe, the horizontal run is 2 inches diameter, and the elbow between them is a reducing elbow. The elbow and horizontal run are type 316 stainless steel, and the vertical run included an inconel safe-end. The location of the crack was in the weld between the elbow and the horizontal pipe, near the top of the pipe. The distance from the crack to the cold leg inside diameter was 14 inches, or about 10 pipe diameters. The

crack was circumferential, 2 inches (50.8 mm) long on the inside and 0.55 inches (14 mm) long on the outside surface, centred at the 11 o'clock position. The drain line was not insulated. The cause of the cracking was TF, attributed to turbulence penetration of the hot RCS fluid extending into the horizontal pipe. The horizontal pipe, being uninsulated, allowed heat to escape to the surroundings, and when the turbulence penetration reached the horizontal run, this produced thermal stratification in the line. Fluctuations in the extent of turbulence penetration caused local thermal cycling at the elbow weld, a point of stress concentration. There were other contributing causes as well. Two improperly installed pipe support U-bolts restricted the free thermal expansion of the pipe and produced a 37 ksi stress at the elbow. In addition, the placement of the pipe supports caused the horizontal pipe to slope upward away from the elbow, which facilitated thermal stratification and cycling in this pipe run. In addition, the toe of the cracked weld had a pre-existing notch.

- Large leak due to a longitudinal crack in a mixing zone of the RHRS of Civaux unit 1. On 12 May 1998, with the unit in intermediate shutdown, the pressuriser level decreased and a fire alarm was triggered in the reactor building. A large primary leak (leak rate of about 8.3 kg/s) had developed, and it was compensated by the charging system. After rapid cool-down of the reactor, the leak was identified to come from RHR train "A"; additional details on this event are provided in Section 4.2.4.

3. Safety significance of TF failures

A pipe failure caused by TF can have a direct or indirect impact on plant operation. Examples of direct impact include flow diversion and loss of the affected train or system or an initiating event such as a loss-of-coolant-accident (LOCA). A direct impact may result in automatic safety system actuation and reactor trip or operator action may be needed to initiate a controlled plant shutdown. An example of an indirect impact is degraded pipe condition that is subjected to an operability determination and without need for immediate operator intervention.

3.1. Consequences of TF failures

Figure 3.1 provides a high-level summary of the total failure population of 253 events, organised by operational impact and consequence of a below ground pipe failure. The operating experience data is grouped into nine consequence categories[6]. While it is possible for some events to result in more than one consequence, the dominant consequence is assigned in the database.

- Flooding/spraying of equipment area.
- Unplanned outage work. Applies to situations involving scheduled below ground piping system inspections performed during a maintenance or refuelling outage and the discovery of a degraded pipe condition that requires prompt remediation.
- Manual/controlled shutdown from full power. This typically means that a manual reactor shutdown is performed when a limiting condition for operation (LCO) cannot be met; see below.
- Cool-down from hot shutdown or cool-down from hot standby.
- ESF/RPS actuation. In response to postulated accidents, the engineered safety features (ESF) actuation signals actuate or realign safety-related systems, equipment, and/or components and isolate non-safety-related systems. Various parameters are monitored by plant instrumentation to determine whether an accident or other condition requiring protective action has occurred. In the reactor protection system (RPS), multiple parameters are monitored and compared. When enough signals in an appropriate combination have exceeded their respective set points, the RPS system is designed to safely shut down the reactor and start cool-down actions. In many boiling water reactor (BWR) designs, RPS also includes containment isolation and radioactive materials release functions. In PWR designs, these functions are usually situated in ESF systems.

6. In CODAP, the event classification is done in multiple ways. It is done by “event type” (e.g. small leak, large leak, rupture), “isolable/non-isolable pressure boundary breach” (yes/no), “collateral damage” (e.g. flooding/spraying of equipment area), and “direct impact on plant operation” (e.g. automatic turbine trip/reactor trip, manual shutdown, power reduction).

- Expanded outage work. Applies to situations involving scheduled inspections performed during a maintenance or refuelling outage and the discovery of a degraded pipe condition that prompts further non-destructive examinations but without impacting the overall outage schedule.
- No operational impact. A pipe failure that can be corrected without impacting any other routine plant operation activities.

Figure 3.1. Operational impact of TF failures

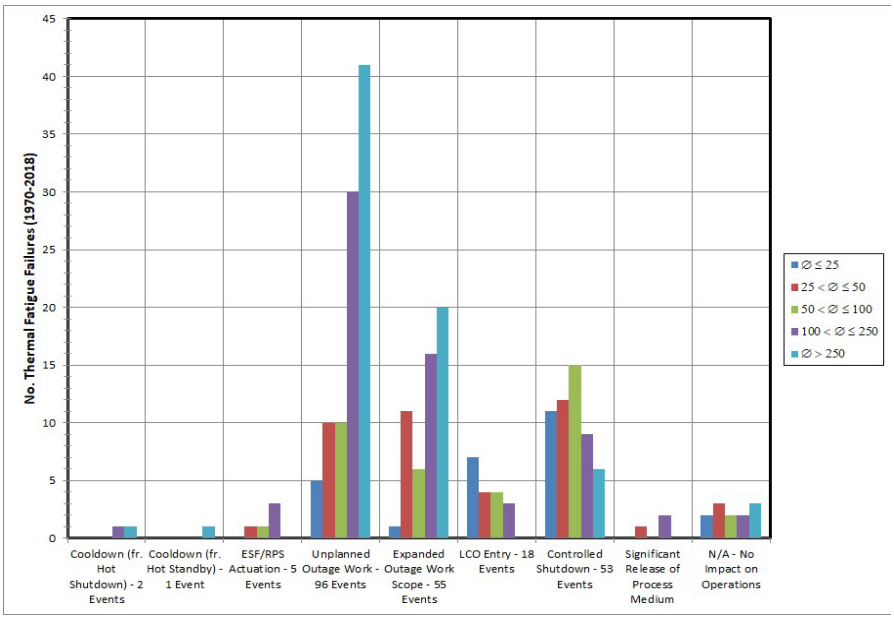

- LCO entry[7]. Discovery of a degraded condition (e.g. a through-wall leak) results in a LCO action statement. When an LCO cannot be met, the reactor must be shut down or the licensee must follow any remedial action permitted by the licensing basis (e.g. technical specifications) until the condition can be met. In CODAP, this consequence category is applied to pipe failure events for which corrective action is completed within a time frame as specified in the technical specifications.

3.2. Considerations of TF in probabilistic safety assessment

The history of LOCA frequency model development is as old as the commercial nuclear industry. There have been numerous efforts to develop plant and location-specific LOCA frequencies that reflect the unique piping configurations and susceptibilities to environmental degradation. The analytical approaches have ranged from top-down apportionment of fixed LOCA frequencies to specific locations within a reactor coolant pressure boundary (RCPB), to a bottom-up approach where location-specific LOCA frequencies are aggregated to a plant-wide LOCA frequency. An example of high-level guidelines for LOCA frequency assessment are contained in the ASME/ANS "Standard for Level one/Large Early Release Frequency Probabilistic Risk Assessment for Nuclear

7. For a definition, refer to the "Glossary of technical terms" in Annex B.

Power Plant Applications".[8] As another example, the US Nuclear Regulatory Commission has issued a draft regulatory guide 1.229 [32], Section C (Staff regulatory guidance) of which addresses "acceptable technical approaches for how to estimate location-specific LOCA frequencies."

The "bottom-up" approach to LOCA frequency assessment consists of multiple analysis steps, beginning with a detailed consideration of the constituent elements of the evaluation boundary. As one example, for a PWR plant, the evaluation boundary includes the following:

- Reactor coolant system (RCS) hot leg; i.e. the large-diameter piping between the reactor pressure vessel and steam generator.
- RCS cold leg; i.e. the large-diameter piping from the steam generator to the reactor pressure vessel.
- Pressuriser surge line; piping between the pressuriser and RCS hot leg.
- Multiple branch connections, including RCS cold leg and hot leg drain lines, high-pressure injection, and chemical and volume control (RCS make-up), pressuriser spray, accumulator injection, decay heat removal.

For each element of the RCPB a formal degradation mechanism analysis is performed to determine the potential and observed degradation mechanisms. Next follows an evaluation of the relevant operating experience, including the level of defence-in-depth provided through the implementation of component degradation mitigation strategies. Finally, the specific calculation cases to consider (i.e. combinations of material, pipe size and degradation susceptibility) are defined, including the associated input parameters. Overviews of LOCA frequency models and the different calculation strategies are summarised in references [12][13][14][15].

An example of the contribution of TF to the calculated, plant-specific LOCA frequency is given in Figure 3.2. It is a composite of results obtained from several relatively recent (2011 to 2015) plant-specific LOCA frequency calculations. According to this example, approximately 20% of the total LOCA frequency is attributed to TF.

8. https://adams.nrc.gov/, Accession No. ML15335A179.

Figure 3.2. An example of the contribution of TF to PWR LOCA frequency

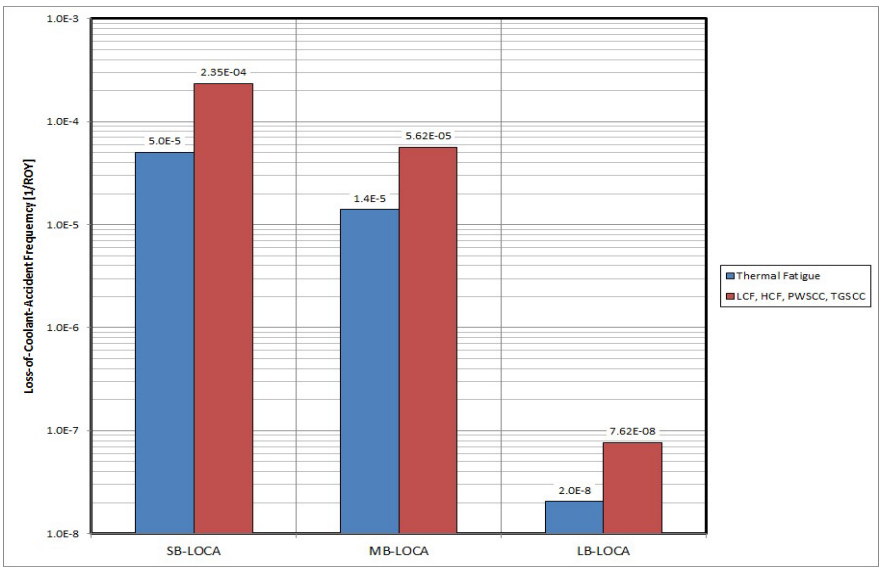

Note: In this example the "SB-LOCA" category considers all pressure boundary break sizes between 12.7 mm equivalent break size (EBS) and 50.8 mm EBS (12.5 mm < EBS ≤ 50.8 mm). The "MB-LOCA" category considers the continuum EBS range of (50.8 mm < EBS ≤ 152.4 mm), and the "LB-LOCA" category considers the continuum EBS range of (152.4 mm < EBS ≤ 1114 mm). LCF = low-cycle fatigue; HCF = high-cycle fatigue (vibratory fatigue); PWSCC = primary water stress corrosion cracking in dissimilar metal weld locations; TGSCC = transgranular stress corrosion cracking.

4. Operating experience data review

Summarised in this section is the TF operating experience as recorded in the CODAP event database. For each country or economy, a discussion is included of selected significant events as well as the particular approaches to TF management. The term "significant" refers to operational impact as well as the impact of an event on regulation and/or industry initiatives to address below ground piping ageing issues.

4.1. High-level database summary

The CODAP event database content with respect to TF failures is summarised in Figures 4.1 through 4.4. Of the total data subset, crack-part failures represent around 50% of the US operating experience and 18% of the Swedish experience with TF (this is addressed in further detail in Section 4.4.5). The operating experience is delineated as follows:

- Figure 4.1. TF operating experience by period and plant type (i.e. BWR, PHWR and PWR).
- Figure 4.2. In this chart, the operating experience is organised by country and mode of failure. It should be noted that as a founding database project member, Sweden remained an active participant in data exchange through the end of the calendar year 2014.
- Figure 4.3. In this chart, the database content is organised by the plant system affected by TF as well by the event dates as being pre-1999 or post-1998.
- Figure 4.4. In this chart, the operating experience is organised by nominal pipe size and structural integrity impact.

The majority of the TF events involve non-through-wall cracks discovered during scheduled ISI using NDE technologies and procedures. To date, there have been two events resulting in a significant through-wall peak flow rate > 8 kg/s (or circa. 127 gpm, US), corresponding to about 8.3% of the total event population. Various high-level, qualitative insights may be derived from the charts. Trends in the operating experience data are attributed to:

- material ageing;
- changes in reporting practices and requirements;
- changes in inspection practices and requirements;
- permanent piping system design modifications.

More in-depth evaluation of the events is needed to distinguish the significance of each of these four causal factors in the trends exhibited in Figures 4.1 through 4.4.

Figure 4.1. Number of TF failures by time period and plant type

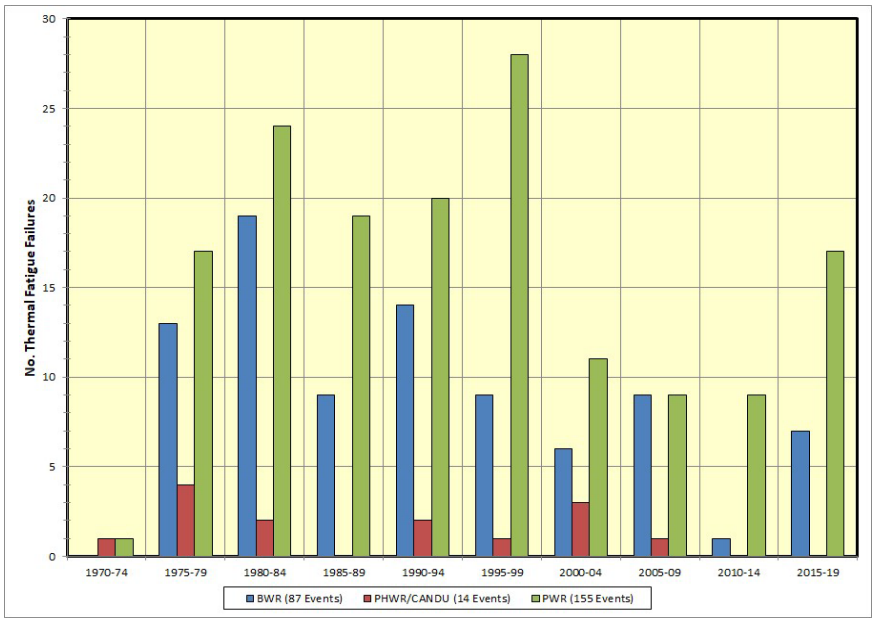

Note: Information on thermal fatigue events is still being collected for the period 2010-2020.

Figure 4.2. TF failures by country

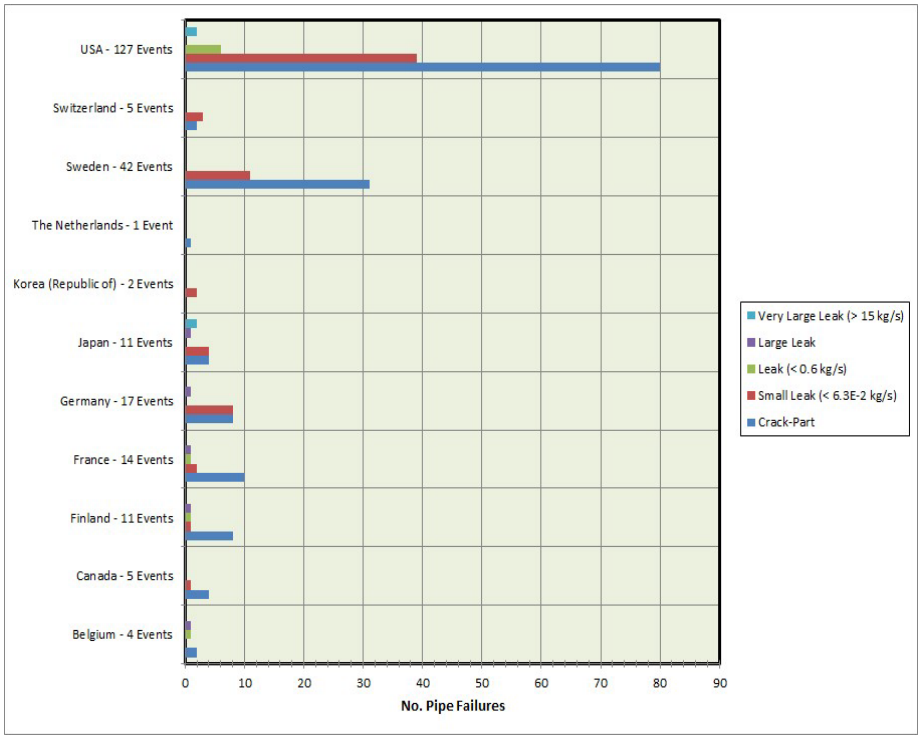

Figure 4.3. TF operating experience by plant type, system and time period

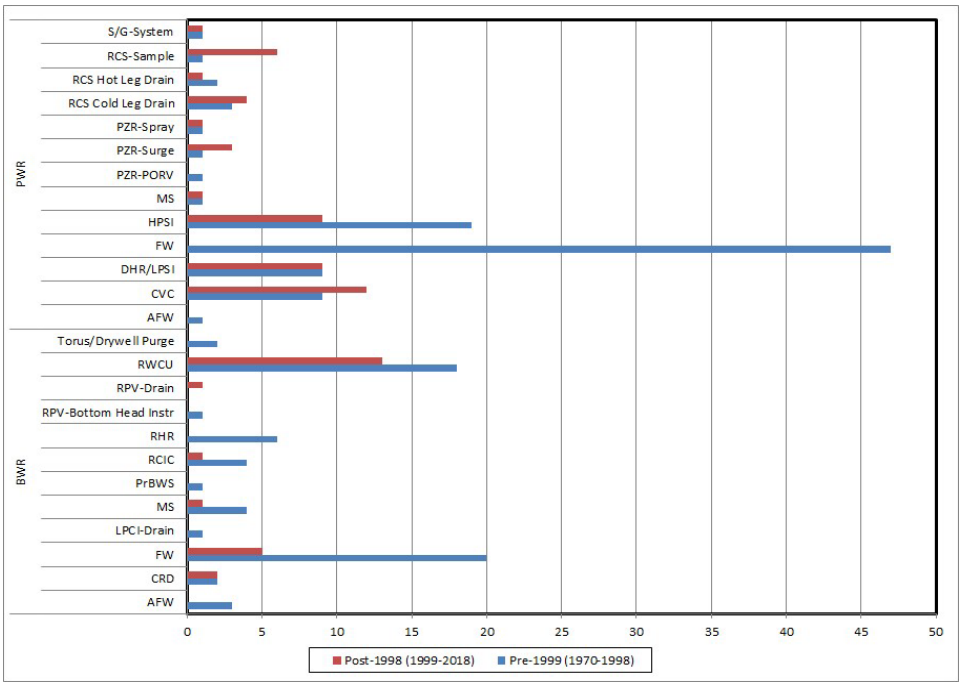

Figure 4.4. TF failures by structural integrity impact

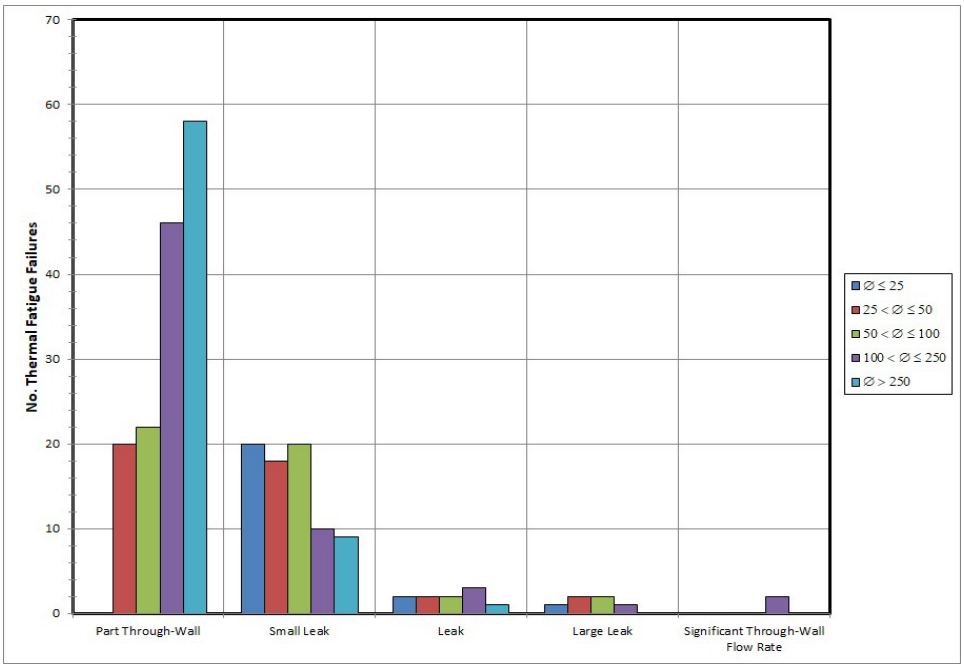

Note: The two events with "significant through-wall flow rate" are Civaux-1 (May 1998, ca. 8.3 kg/s peak flow rate) and Olkiluoto-1 (August 1979, ca. 20 kg/s peak flow rate).

4.2. Specific TF operating experiences

This section includes selected summaries of the post-1998 operating experience with TF in commercial nuclear power plants. In addition, this section presents the different approaches among participants to TF management and mitigation.

4.2.1. Canada

A recent study by the CANDU owners group (COG) [16] concluded that TF via thermal stratification, cycling and stripping is not a major concern for CANDU nuclear power plants due to the lack of sources and locations promoting direct contact and mixing of hot and cold fluids. The study was performed using an adaption and modification of the EPRI risk-informed in-service inspection (RI-ISI) methodology [17], known as "COG best-fit RI-ISI" methodology [18]. The CANDU reactors have some specific design features that differentiate them from generic PWR designs; however, supplementary research and surveys on CANDU operating experience with TF is valuable to compare to and learn from operating experience available for the PWR fleet. These features and/or differences in design imply that certain CANDU systems and components are not as susceptible to TF as those found in a typical PWR.

The CANDU primary heat transport system (PHTS) operates at pressures and temperatures higher than those of the interfacing systems do and there are very few possible sources for hot-to-cold fluid mixing where isolation valves exit. In addition, branch configuration of the drain and suction lines are mostly contained in the hot feeder cabinet and do not experience thermal cycling. A significant amount of evidence indicates that certain steam generator (SG) feed-water nozzles and adjacent piping of PWRs exhibit TF susceptibility. Since the steam generators of newer CANDU six stations have an internal preheater (instead of a feed-water distribution ring like in most PWR steam generators), the potential for high-frequency thermal stripping, as seen in a typical PWR, has been eliminated [16]. Nevertheless, due to the inherent temperature differences between incoming feed-water and SG internal recirculating flow, the potential for TF still exists at the feed-water entrance nozzles. This could be a problem in the CANDU SGs, as there has been a case where a CANDU station had a steam generator with cracks found in the weld between the feed-water nozzle and the feed-water thermal sleeve [16].

In PWRs, surge lines are typically instrumented on for temperature and deflection measurements to monitor for the existence of thermal stratification. The in-surge/out-surge flow also has an impact on the pressuriser and may cause additional thermal stresses in the pressuriser bowl. Even though there is ISI evidence of TF in CANDUs in Canada, some indirect measurements taken from the commissioning of one CANDU plant showed indications of thermal stratification in the horizontal run of the surge line [16]. To address this, the station adjusted its warm-up and start-up procedures to mitigate the impact of thermal stratification in the surge line. There have since been no recorded disturbances related to thermal stratification for this station. In addition, the potential for TF caused by the in-surge/out-surge flow is greatly reduced with the use of a thermal sleeve in the pressuriser. However, the weld connecting the surge line to the pressuriser is left exposed and could be susceptible to thermal stresses. Consequently, the pressuriser bowl of CANDUs has been identified as a potential fatigue location because of differential thermal expansion of the thermal sleeve and pressuriser bowl during in-surge events [16].

Over the years, there have been few cases potentially related to the appearance of TF at CANDU nuclear power plants. All of these cases have been related to class one piping

failures occurring either at or downstream of the thermal mixing tees connecting the D_2O feed pump outlet lines to the main PHTS piping [19]. The most probable cause of these events was cyclic thermal loading that was not considered in the original CANDU design. Table 4.1 includes a summary of TF failures in safety class one heat transport systems.

Table 4.1. Examples of safety class one piping failures at CANDU plants

Year	Description
1991	Thermal mixing tee connecting to purification return line to the HTS
1993	Thermal mixing tee connecting the feed line to the HTS
1999	Thermal mixing tee connecting the feed line to the HTS
2001	Mixing tee weld failure at the tee connecting the purification return line to the HTS
2003	The weldolet discovered in 2001 was found cracked again

In Canada, requirements for fatigue management are specified under the CSA standards. Fatigue evaluations required for all class one components can be found under CSA Standard N285.0, which contains general requirements for pressure-retaining systems and components. This consists of selection of code classification, design fabrication, inspection and installation of pressure-retaining systems and components, regulatory requirements and applies ASME Section 3 or "non-nuclear" standards. CSA Standard N285.4 specifies the requirements for periodic inspection programmes for the nuclear pressure boundary components of CANDU nuclear power plants. It requires assessments of components for susceptibility to fatigue and environmentally assisted cracking arising from normal operation at select candidate locations for inspection. Additionally, CSA standard N285.7, first issued in 2015, establishes inspection programme requirements for safety significant non-nuclear (balance-of-plant) pressure boundary components and requires an assessment of TF susceptibility.

To date, there has been a single case in which TF was thoroughly investigated at an operating CANDU station. This was done with the use of EPRI/MRP-132 TF screening techniques. Results of the inspection showed no significant signs of TF and it is reasonable to expect that other operating CANDU stations would have similar results [20]. However, it is worth noting that the screening criteria depend on design and operational parameters, so detailed screening and evaluations of each operating plant are necessary to come to conclusive findings. A review of the CANDU plant using the EPRI/MRP-146 and EPRI/MRP-132 identified different locations that have potential for thermal [21]. The identification of components at risk presents an opportunity to proactively assess the severity of fatigue and take corrective actions to mitigate the effects of TF on these systems and components, if needed. Automatic monitoring software can be used to efficiently monitor key operating parameters within systems susceptible to thermal fatigue [22].

In recent years, recommendations and potential improvements to TF management have been introduced for CANDU stations. The following monitoring techniques have been introduced to help address and mitigate the effects of thermal fatigue [21]:

- cycle-based fatigue (CBF) monitoring;
- stress-based fatigue (SBF) monitoring;
- flaw tolerance approach.

CBF monitoring computes fatigue directly from transients and determined parameters. In reference to TF, CBF algorithms have been developed for three limiting HTS components and SG lugs [21]. SBF monitoring uses directly measured or computed real-time stress data. The flaw tolerance approach demonstrates that a postulated (or an actual crack) will not grow through-wall in a specified operating period [21].

In summary, there is limited information on operating experience with TF associated with the CANDU design. However, specific screening techniques have identified components and/or systems of CANDU stations that are susceptible to TF. Fatigue-related failures at CANDU stations have been observed on class one piping at or downstream of the thermal mixing tees connecting the D_2O feed pump outlet lines to the main PHTS piping. With the systems and components identified through screening techniques and patterns in previous events, the integration of various monitoring techniques and software presents an opportunity to gain more insight into TF associated with the CANDU design and to mitigate its effects.

4.2.2. Czech Republic

The Czech Regulatory Body (SÚJB) in 2017 issued a new regulatory requirement specific to TF management: C28 [Rozhodnutí č. j. SÚJB/OSKŘaE/12142/2017]. According to this regulatory requirement, evaluations are to be performed to identify the locations where TF can occur. This requirement applies to all safety class one and two systems and high-energy safety class three piping as well as to certain non-safety-related system where a structural failure can affect safety-related components.

In 2000, a thermal fatigue-monitoring system was installed at the Dukovany nuclear power plant. At each reactor unit, 103 locations are monitored using 242 thermocouples. A similar system was subsequently installed at the two reactor units at the Temelin nuclear power plant; see Figure 4.5.

Figure 4.5. Schematic of thermal fatigue-monitoring locations at the Temelin nuclear power plant

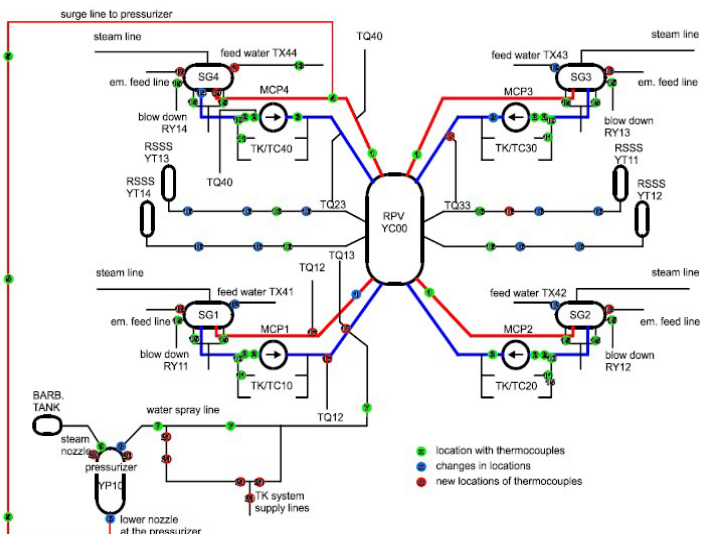

Source: Reproduced from Žaloudek, J. et al, "Innovation of Temelin Diagnostic and Monitoring System," Proc. Int. Topical Meeting VVER – 2004 Experience and Perspectives, Prague, Czech Republic, 19-22 October 2004.

Fatigue life calculations of the main circulation piping, adjacent high-pressure, low-pressure and passive emergency piping systems of safety class one, SG and pressuriser are performed on all units in the Czech Republic. Fatigue life calculations are performed using real operating modes.

Medium temperature variations entering into the calculations are adjusted according to measured temperature values obtained from both standard measurements of basic primary medium parameters and diagnostic measurements of temperatures performed on the outer surfaces of pipes and primary circuit and secondary circuit components. Detailed analyses are performed using the finite element method.

Temperature measurement was used to assess fatigue life time in cases where a lack of information about temperature distribution in piping and components is supposed, in particular in all cases when changes of medium temperature are not correctly determined by the actions of pumps or valves, or in cases where the medium temperature is not measured directly. Piping and component temperature measurements are performed to obtain information on:

- general temperature distribution on whole component;
- thermal expansion of piping systems;
- quick temperature transients;
- stratification – special temperature distribution;
- combinations;
- internal tightness of valves;
- monitoring of operational modes;
- precise warming up of pressure vessels.

4.2.3. France

On 12 May 1998, with the Civaux unit in intermediate shutdown, the pressuriser level decreased and a fire alarm was triggered in the Reactor Building [23]. A large (ca. 8.3 kg/s) primary leak had developed, and it was compensated by the charging system. After rapid cool-down of the reactor, the leak was identified to have come from RHR train “A”. About ten hours after the event occurred, the RHR train “A” was isolated and the leak was stopped. The source of the leakage was a cracked weld on an elbow downstream of a control valve. The weld was longitudinal, while the elbow was fabricated from two elbow halves and welded together. The crack length was approximately 180 mm. The event was classified as level two on the International Nuclear and Radiological Event Scale (INES). The observed cracking was immediately downstream of the mixing tee in a DN250 Schedule 40 (9.3 mm wall thickness) 304 L stainless steel seam-welded elbow. The worst cracking that led to the through-wall leak was at the extrados welded seam, and had an outside surface length of 180 mm with an inside surface length of 350 mm. The surrounding area of the elbow and locations between the elbow and the mixing tee exhibited widespread crazing-type cracking characteristic of TF. Examination of this elbow and similar ones from other plants confirmed that high-cycle TF was the mechanism. No fabrication defects were found. In general, the deep cracks (one through-wall at Civaux, and others up to 80% of the wall thickness) occurred along the longitudinal and circumferential welds, starting at the root of

the weld on the inner surface. There were many small cracks, mainly in the weld counter-bore regions and where there was evidence of grinding.

Électricité de France (EDF) initiated a major assessment, analysis and research programme to better understand the phenomenon that caused the incident. In 2013, at the end of the programme, which ran for more than ten years, the Institut de Radioprotection et de Sûreté Nucléaire (IRSN) examined EDF's conclusions and delivered its own analysis. The IRSN highlighted the fact that EDF's analysis and research had provided a more detailed understanding of the phenomenon, but it also said that an accurate record should be kept of the operating times of circuits vulnerable to TF where there were important differences in temperature, to enable appropriate checks to be introduced.

4.2.3.1 Action taken as a result of the 1998 incident at Civaux

In the 1998 incident at Civeaux Nuclear Power Plant, reactor one was undergoing a normal shutdown when a 30 m^3/hour leak appeared in the Reactor Heat Removal System (RHRS). This system is used to remove the residual power from the reactor core. This major leak was caused by a 180 mm long crack through the pipe at an elbow immediately below a mixing tee linking a pipe (or line) carrying hot water bypassing the heat exchanger with a pipe carrying cold water coming out of the heat exchanger (Figure 4.6). ln the mixing area, the hot water was at a maximum temperature of 180°C and the cold water at a temperature of around 20°C.

Figure 4.6. Area where the leak occurred

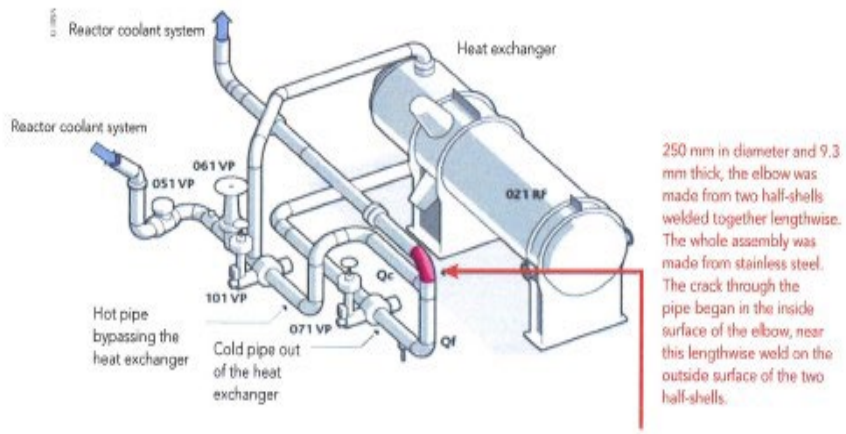

Inspections were carried out of the other 1 450 MW reactors (Civaux 2, Chooz B1 and B2) and then of all other reactors. The inspections were then extended to all mixing areas in the RHRS circuits of French reactors. The ultrasonic testing revealed damage to all the areas checked, prompting EDF to replace the relevant areas of the RHRS circuits in all reactors within three years. Examinations of the RHRS piping sections that had been removed revealed evidence of TF that had not been taken into account at the design stage. This phenomenon causes multiple shallow cracks, crazing (cracking of the surface) or isolated cracks starting at the base of a weld bead (Figure 4.7).

Figure 4.7. Cross-sectional view and internal view of weld bead of the cracked elbow

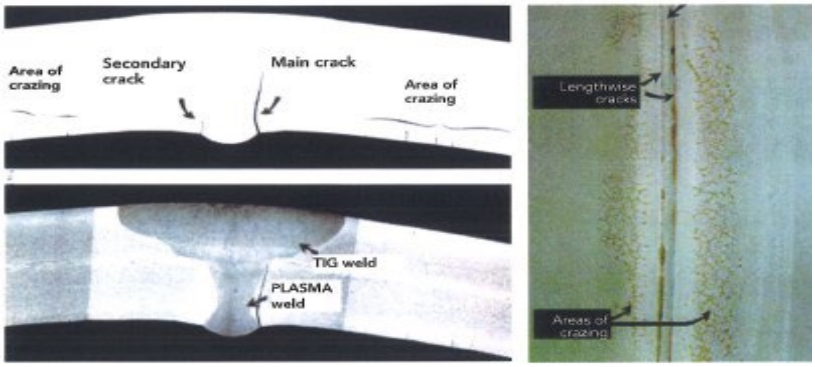

From 2000, on IRSN's recommendation, EDF introduced a policy of regularly checking the replaced RHRS sections every 450 hours of operation at wide temperature differences. The 450-hour frequency was based on the first cracks observed in the RHRS circuits removed from reactor 2 at the Civaux power plant. The plant operator's initial analyses could not fully explain the location and extent of the damage observed. Furthermore, the traditional method of analysing (mechanical) fatigue could neither predict nor explain the damage observed. According to the reports on numerous inspections carried out since, TF in the mixing areas of RHRS circuits is a phenomenon that depends on many factors: the operating time at wide temperature differences, thermal and hydraulic factors (the speed and temperature of the fluid), the condition of the surface and the mechanical stresses in the different components. Because there are so many factors, understanding this type of fatigue is particularly complex.

4.2.3.2 Vulnerability of mixing areas to TF

When France's nuclear reactors were designed, TF was not taken into account when designing mixing areas. The Civaux incident prompted EDF to introduce a method for evaluating the risk of TF in mixing areas in pipes.

EDF's decision was based on an indicator commonly used for fatigue, the usage factor. This is defined as the ratio between the number of stresses applied to a particular component and the maximum stress values indicated by the mechanical fatigue curve for the material that the component is made from. Mixing areas with a usage factor of more than one were considered "vulnerable to thermal fatigue". This method was applied to all circuits containing mixing areas, particularly certain pipes connected to the RCS, in order to introduce appropriate monitoring for the vulnerable areas identified.

4.2.3.3 Research and development on TF

At the end of 1999, EDF and AREVA began a major research and development programme. The aim of the programme was to improve the knowledge and analysis of TF, particularly in mixing areas, and to identify more clearly the conditions under which the degradation mode observed would arise, through an exhaustive survey of the "vulnerable" areas.

In parallel, to bolster its own expertise in this area, the IRSN also carried out some research. In partnership with the Commissariat à l'énergie atomique et aux énergies alternatives (CEA), the IRSN conducted a study aimed at understanding the specific nature of the

stresses involved in TF, compared with the stresses commonly taken into consideration for mechanical fatigue. The study was conducted using an experimental device known as FAT3D (Figure 4.8), in which a pipe was subjected to thermal stresses: a network of cracks rapidly appeared and spread, with some spreading right through the material. In particular, it was established that the number of cycles it took to make the cracks appear in the test specimens was always less than the number predicted by the calculation made using the usual analysis methods for mechanical fatigue. The presence of the welded joint may result in the first cracks appearing more quickly.

Figure 4.8. FAT3D TF testing device

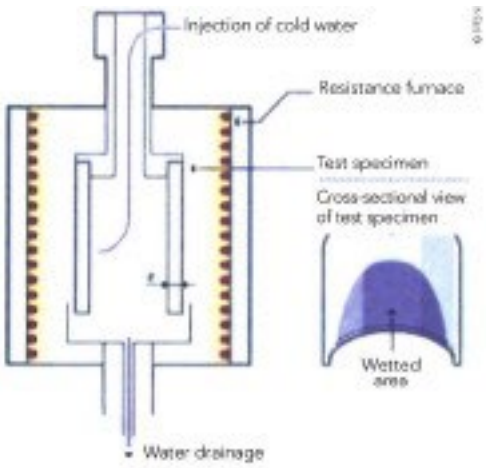

4.2.3.4 Tests on models representative of a mixing area

EDF had some results of tests that had been performed since 1976 on models that were a geometric representation of the mixing areas and reproduced the flow in these areas. These model-based tests were primarily designed to provide the loads (average temperature ranges, heat transfer coefficients) for studies of mechanical behaviour related to operating transients. Following the TF incident at Civaux, EDF completed its database by carrying out tests that were not restricted to the RHRS circuit but also covered other mixing areas in the RCS feed line (Figure 4.9). For the different mixing areas, these later tests allowed:

- The temperature ranges and the coefficients for heat transfer between the fluid and the internal wall of the pipes to be evaluated.
- Information to be gained about the sites of temperature fluctuations due to the mixing of a hot fluid with a cold fluid, based on the geometry and the ratios of the flow rates of the two fluids.

The model-based tests and the associated computational models gave a realistic assessment of the thermal loading affecting the pipes in the mixing areas. Taking account of the results of the research and development and the model-based tests, the inspection method for mixing areas “vulnerable to TF” used from the 2000s involved the scheduling of periodic checks of the identified areas, usually at the time of the ten-yearly inspections.

Figure 4.9. Diagram of the feed line connected to the RCS

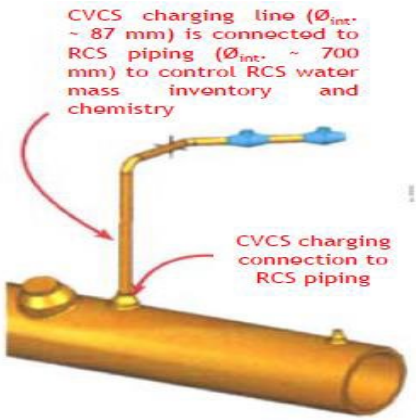

4.2.3.5 Change to the method for assessing mixing areas

Since 2008, EDF has felt that the method and means of monitoring it has introduced address the problem of TF in mixing areas. EDF has adopted a more representative modelling of thermal transients based on the results of the model-based tests, and has replaced the conventional values used for heat transfer coefficients with values based on reality, taking account of the thermal and hydraulic conditions that actually exist in mixing areas. However, the results of the research have not made it possible to upgrade the thermomechanical method used for estimating mechanical stresses.

Lastly, the research has led to the adoption of a lower threshold than before for the vulnerability of stainless steels to TF: mixing areas where the temperature difference of the fluids is 50°C or more (rather than 80°C or more) are now considered to be "vulnerable". This change has prompted EDF to review its list of mixing areas that might be "vulnerable to TF".

4.2.3.6 Representativeness of the usage factor of the mixing areas

Between 1999 and 2002, EDF appraised the sections of the RHRS circuits removed after the Civaux incident. The usage factors of these sections were also calculated on the date of removal; the usage factors were greater than one. This confirms their vulnerability to TF. However, no correlation could be established between the usage factor values and the dimensions of the cracks. ln 2001, EDF decided to investigate the possibility that there were defects in a mixing area considered "vulnerable to TF": the branch pipe of the RCS feed line (Figure 4.9).

For appraisal purposes, EDF took the opportunity provided by the replacement of the steam generators in reactor one of the Fessenheim power plant after 24 years of operation, to remove a section of piping from the RCS, including the connection joint of the feed line. The inspection of this connection joint, which had a usage factor calculated at more than one, did not reveal the beginnings of any cracking due to fatigue. Furthermore, ultrasonic testing of feed line connection joints carried out since 2004 on around 20 reactors has not detected any evidence of TF.

In 2013, the IRSN examined the evidence from around a decade of inspections of mixing areas, including the sections from the RHRS circuit and the branch connections of the feed line. The IRSN felt that the usage factor was an indicator of the risk of cracking, but that it

was not suitable for assessing the damage that could occur because of TF. It was therefore important that, in addition to the ten-yearly inspections, the frequency of inspection of all mixing areas with a usage factor greater than one should be determined based on the operating time at wide temperature differences. This was implemented by EDF in the case of the mixing tee in the RHRS circuit.

4.2.3.7 Counting operating time at wide temperature differences

ln 2008, EDF introduced a system for metering on a daily basis the amount of time spent operating at wide temperature differences, for all mixing areas "vulnerable to TF", and set thresholds for this. However, it was not until 2013 that EDF specified what action should be taken when these thresholds were reached. If the operating time of a mixing area at wide temperature differences is greater than expected, EDF will either bring forward the check of the area normally scheduled to take place during the ten-yearly inspection or will justify the fact that its condition will not have changed using calculations. In the opinion of the IRSN, however, if a threshold for the time spent operating at wide temperature differences is exceeded, EDF should inspect the mixing area concerned without delay.

4.2.3.8 Conclusion

Following the 1998 incident at Civaux, the IRSN analysed the substantial amount of work done by EDF to establish the risks to its reactors from TF. A better understanding of local thermal and hydraulic phenomena, developed because of numerous model-based tests and some computational modelling, has brought improvements to the method of identifying mixing areas "vulnerable to TF." However, the IRSN still has reservations about basing an assessment of the risk of damage to sections of the mixing areas solely on a calculation of the usage factor. In the IRSN's view, priority should be given to checking these sections on the basis of the time spent operating at wide temperature differences.

4.2.4. Finland

Finland has four operating commercial nuclear power plants at two sites; two BWR units (OL1 and OL2) at the Olkiluoto site and two PWR units at the Loviisa site. The fifth power plant unit (OL3) is under construction. The OL1 and OL2 BWR units are of type AA-IV BWR-2500, which were designed by AA of Sweden. OL3 is an EPR (European PWR) plant unit. The two PWR units (LO1 and LO2) at the Loviisa site are of type VVER-440, which is based on a Soviet concept (Atomenergoeksport). However, the Loviisa units are designed and constructed to meet the Finnish safety requirements and conditions. The basic AA Nuclear Steam Supply System (NSSS) design of the OL1 and OL2 BWR units differs in many respects from the NSSS design by General Electric. OL1 and OL2 are essentially identical to Forsmark-1 and Forsmark-2 in Sweden. The AA-specific thermal fatigue-induced damage experience is summarised in Figure 4.10.

Figure 4.10. TF failures in AA reactors

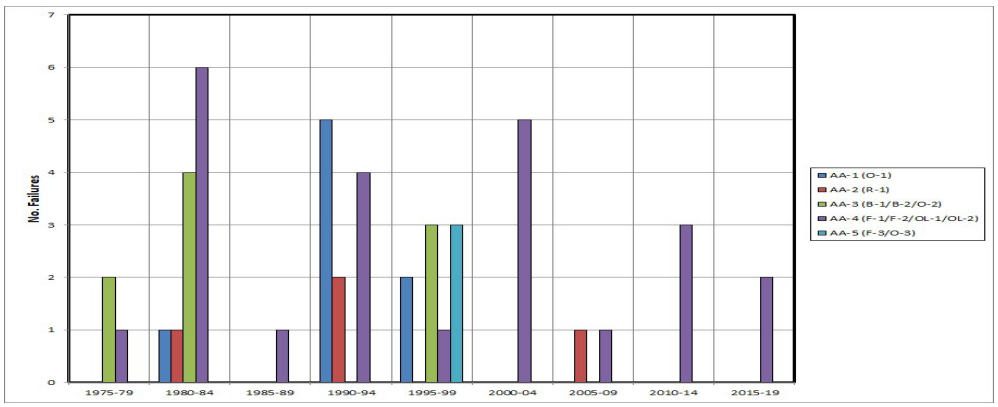

Source: AA-I (Oskarshamn-1), AA-II (Ringhals-1), AA-III (Barsebäck-1/2 and Oskarshamn-2), AA-IV (Forsmark-1/2 and OL-1/2), AA-V (Forsmark-3 and Oskarshamn-3); AA-I through AA-III units have external recirculation pumps and AA-IV and AA-V units have internal recirculation pumps.

An example of recent TF experience in OL1 and OL2 involves the discovery of several 2 to 5 mm deep cracks on the inner surface of the main feed-water piping. The cracks were detected during respective refuelling outages in 2014. These cracks were located in the base metal of the FW/RHR mixing tees. The feed-water system of the AA-IV design consists of two main header pipes, each with a RHR branch connection. The RHR system is basically always in operation. When the reactor is in hot standby, there is no preheating of the feed-water. To keep the RPV water level within the normal allowable range, smaller amounts of cold water are added through one of the FW lines. Thus, the ~20°C feed-water and 280°C RHR water mix and create cyclic temperature fluctuations in the large-diameter FW pipe upstream the tee (Figure 4.11).

Figure 4.11. Location of the crack indications in FW/RHR mixing tees

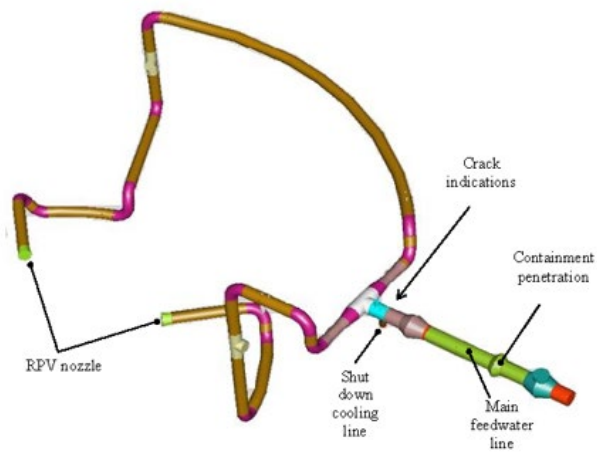

Cracks in the mixing tees in OL1 and OL2 were first discovered in the early 1980s and in response to these discoveries the mixing tees in both units were replaced in 1986. To minimise thermal fluctuations and in response to this operating experience, the original

design of the mixing tee was improved by installing sparges (or static mixers) to improve the mixing of the fluids and to create a more uniform temperature distribution.[9]

Although this 1986 design of the mixing tee did not last until End of Life (EOL), it lasted about 25 years. The mixing tee is actually loaded by most severe thermal transients in the whole power plant. Therefore, the tee was considered relatively reliable, especially as the crack growth was slow, allowing for time to design the replacement of the tees. For this reason, the design of the mixing tee was not changed, except for one minor change. The inspection hatch was removed to simplify the geometry. The hatch was not necessary anymore as it had not been used for a long time and endoscope inspection from further away proved enough to assess the internal condition of the sparge. Furthermore, the condition-monitoring of the run pipe (main feed-water pipe) is in the ISI programme and inspected every third year with ultrasonic.

There are two mixing tees per unit. They were placed under closer monitoring after the crack indications. The preliminary safety analysis concluded that no repair was needed for the ongoing operating cycle. The three most cracked mixing tees were replaced in the 2015 outage and the last in the 2016 outage; see IRS Report 8439 & CODAP Record No. 4758.

The original design of the VVER-440 units in Loviisa did not consider damage mechanisms like thermal mixing in T-junctions and thermal stratification in horizontal piping because their existence was not realised at that time. The importance of these mechanisms is well understood nowadays and corrective actions have been made accordingly. An example of leakage caused by thermal stratification occurred in the pressuriser auxiliary spray line control valve on 16 May 1994. Leakage was localised in a valve body, where a through-wall axial crack was found (Figure 4.12). The control valve is supposed to be closed when plant is on operation; it is used when primary pressure needs to be decreased during normal unit shutdowns. However, investigations revealed that the control valve had not been completely leak-tight, leading to a case where hot steam 325°C could have entered from the pressuriser into the horizontal part of the auxiliary spray line while colder water 250°C could have gone through the control valve from the cold leg side. This could have led to a situation where hot steam stratified in the top part of the pipe with cold water in the bottom (stratification was verified to have occurred only in the LO1 unit). A material study also revealed that the crack initiated from minor internal defects, i.e. inclusions containing titanium that favoured the crack nucleation. It was also noticed that during shutdown, and especially during start-ups, this valve body confronts temperature differences of up to 100°C. In early years of operation, this temperature difference was estimated to be as high as 220-270°C on at least one or two occasions [1].

9. International Reporting System for Operating Experience (IRS), IRS-Report 8439: Thermal Fatigue Cracks in Feed Water Piping Tee, 2015.

Figure 4.12. The shape of through-wall axial crack in control valve

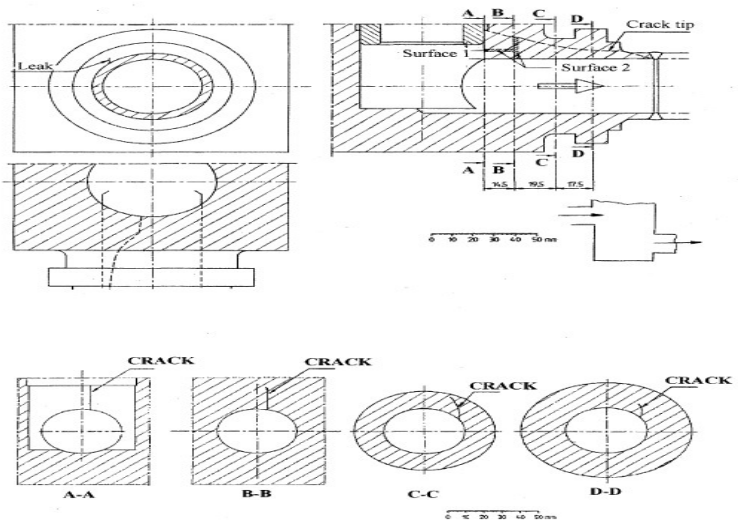

A valve of the same design was used to replace the leaking control valves because it was easily available. After the valves were replaced, both units were restarted on 21 May 1994. However, in 1996, the valves were replaced with a different type of valve design and the pipelines were modified [1].

4.2.5. Germany

As required by the KTA standards, the management of TF in German nuclear power plants starts already within the framework of the design, selection of materials, manufacturing processes and production and installation. These measures are supplemented by monitoring provisions during the commercial operation phase. As a result, no safety significant events have been observed in German nuclear power plants so far. The following review includes, within the context of TF, a brief compilation of the most essential requirements of the KTA standards, a description of the installed equipment for continuous fatigue-monitoring, and a short summary of the German operation experience of the last 20 years.

According to KTA 3201.2 ("Components of the RCPB of Light-Water Reactors – Part 2: Design and Analysis") [25], during the design phase of a nuclear power plant, a fatigue analysis shall be made independently of the type of component to avoid fatigue failure due to cyclic loading later in operation. The bases for fatigue evaluation are the design fatigue curves based on tests carried out in air. KTA 3201.2 presents different procedures for fatigue analysis. In cases where the environment may have a deleterious effect on the fatigue life of the component, a so-called attention value of 0.4 in the cumulated usage factor is defined, above which certain additional measures are necessary.

KTA 3201.4 ("Components of the RCPB of Light-Water Reactors – Part 4: In-service Inspections and Operational Monitoring") [26] includes a requirement to monitor TF loads by a sufficiently dense net of measurement points of the standard instrumentation[10]. The location of the measurements points shall consider effects of the mode of operation (e.g. little mass flows, indifferent pressure conditions, switching operations, temperature

10. The standard instrumentation is installed to monitor the parameters relevant for the integrity of the components within the scope of KTA 3201.4 and comprises measuring equipment to monitor global loadings and – if required – measuring equipment to monitor local loadings.

differentials) and the design (e.g. pipeline installation, isolating function of valves). Stratification effects shall also be monitored by adequate positioning of the measurement points such that all relevant loading variables across the pipe cross-section and axially to the pipe run can be measured. KTA 3201.4 also contains regulations on how to handle and assess the results.

The thermal fatigue-monitoring during operation demanded by the above-mentioned codes and standards is performed using the measuring points of the standard instrumentation as well as of the special instrumentation. Typical parameters monitored by the standard instrumentation include coolant pressure and temperature in different areas of the systems as well as valve positions. The additional special instrumentation allows for monitoring of thermal transients deviating from the systems specifications and/or unspecifiable transients as stratification effects, which otherwise would not be measurable, but which may cause significant fatigue load.

Thermal fatigue monitoring in German nuclear power plants is accomplished by the installation of a fatigue-monitoring system using the standard and special instrumentation. Fatigue-monitoring systems of different suppliers are used with the FAtigue-MOnitoring System (FAMOS) by Framatome GmbH (formerly Siemens/KWU, later AREVA) being the most commonly used one. Differences that exist between the various systems are mostly related to the way to bring the thermocouples into contact with the surface, Figure 4.13.

Figure 4.13. FAMOS Thermocouple installation along the circumference of a pipe

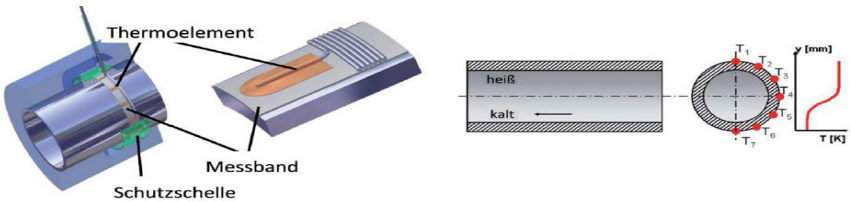

Source: [27].

The selection of the measuring points requires a plant-specific analysis of the fatigue-relevant locations. Figure 4.14 gives an example of the distribution of the respective measurement points of FAMOS in a typical German 4-loop PWR. Typically, around 50 locations are monitored in the primary and secondary circuit. Mostly, locations can be found at the main coolant lines, surge line, pressuriser spray lines and feed-water nozzles.

Figure 4.14. Typical positions of FAMOS measurement points for a four loop PWR

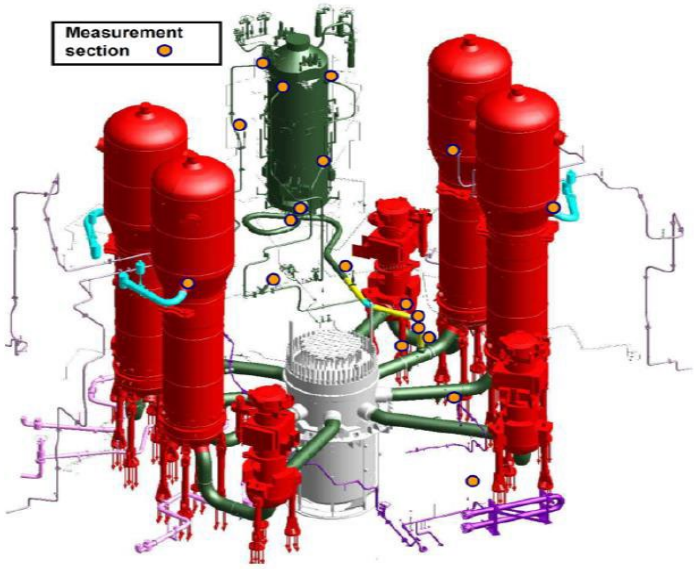

Source: [27].

The goal of the fatigue-monitoring systems such as FAMOS is to gather real information about fatigue-relevant temperature changes at locations most prone to TF. The derived data allows for:

- determination of the cumulated usage factor of the most affected components/locations;
- identification of disadvantageous operation procedures related to TF;
- establishment of a database for fatigue analyses based on realistic fatigue load parameters.

Temperature changes are usually measured using thermocouples, which are placed on the outer surface of the fatigue-relevant locations. Figure 4.13 shows the thermocouple installation used in the FAMOS system. The seven thermocouples along the half circumference of the pipe allow the detection of thermal stratification. At locations where stratification is not assumed to occur, two thermocouples are installed. The thermocouples are installed at a certain distance from welds to not disturb the ultrasonic inspection of the welds. Based on the measured temperature on the outer surface, the temperature on the inner surface is calculated and, where necessary, transferred to the fatigue-relevant location.

In German BWRs, thermal fatigue monitoring is installed in the feed-water piping (RPV nozzles) and at various locations in the RHR system, especially to monitor thermal stratification. In addition, TF is also monitored at the spray lines of the RPV heads in a similar way as the spray lines of the pressuriser in PWRs. Safety significant events due to TF have not occurred in German BWR for the last 20 years.

Table 4.2 lists the German operating experience concerning TF for the last 20 years. The identified events are grouped depending on component and phenomenon, respectively. Afterwards, selected events/groups are described in more detail.

Table 4.2. German reportable events

Event #	Plant	Brief description
1998/099	Neckarwestheim-1	TF on injection nozzles of the CVCs into the cold loop due to internal valve leaks
1998/119	Mülheim-Kärlich	Cracks due to TF loads in the exhaust elbow on an emergency diesel generator
1999/079	Biblis-A	Internal leak in heat exchangers of the reactor coolant clean-up system
2005/036	Grafenrheinfeld	
2005/061	Biblis-B	
2001/003	Biblis-A	Leak at an SG instrumentation line
2003/018	Biblis-B	Crack indications at hard-facing of pressuriser relief and safety valves
2009/019	Biblis-B	Crack indications in the seal housing of the main coolant pump
2009/083	Unterweser	
2010/026	Grafenrheinfeld	
2011/032	Grohnde	
2010/070	Grafenrheinfeld	Indications in the safe-end of the nozzle of the main coolant line connecting to the surge line

The 1998-99 event in Neckarwestheim-1 is comparable to a number of previous events in Germany and worldwide with internally leaking isolation valves, which cause thermal striping and/or stratification. It corresponds to the Farley-2 and Tihange-1 event descriptions presented in Section 2.8. In the case of Neckarwestheim-1, crack indications were found at tee-pieces of the volume control system (TA). It was known from monitoring during operation that increased temperature loads may occur at the connection between the cold and the hot TA leg at loop 10 and 30. Therefore, these areas were replaced by optimised constructions at all loops. The back-up examinations revealed several crack indications at 2 of 3 dismantled tee-pieces of the volume control system (loops 10 and 30) at the inner surface of the cold TA feed line before it leads into the hot TA feed line. The cause of the cracks was attributed to TF. The thermal cyclic loading was caused by creeping flow due to untighten check valves. The tee-pieces are located in the area, which cannot be isolated from the reactor pressure vessel.

In Biblis units A and B as well as in Grafenrheinfeld, some internal leakages occurred at heat exchangers in the reactor coolant clean-up system. The leakages were detected either by activity monitoring of the intermediate cooling water system or by hydrazine input into the CVCS, depending on operating conditions. The leakages were caused by TF cracks in heat exchanger tubes, which were able to develop due to design deficiencies of the tube sheet and manufacturing deficiencies in the tube-to-tube sheet connection in the heat exchanger. As a measure, the heat exchangers were replaced by new ones with improved design.

Due to the findings at a main coolant pump in a Swiss nuclear power plant, the main coolant pump was opened during the 2009 revision in the Biblis-B Nuclear Power Plant (and later in Unterweser, Grafenrheinfeld and Grohnde). The seal housing was subjected to a dye penetrant surface examination. Further investigations revealed transgranular, low-deformation incipient cracks in the axial direction in the seat of the bearing flange, in the groove flank of the sealing area, in the groove base of the sealing area, in the cylindrical seal housing underneath the undercut, and in the blind hole threads. The patterns of the axial cracks and the circumferential cracks were similar and exhibited characteristics of fatigue fracture. It was assumed that the fatigue was caused by cyclic thermal stress. The primary circuit medium with temperatures of about 260ºC and 280°C continuously enters the pump impeller side chamber. Downstream of the high-pressure cooler, the seal water supplied by the volume control system has a temperature of about 50ºC. Via oblique holes in the seal housing, the seal water enters the gap between bearing flange and seal housing and is discharged again through another hole. This means that the outer surfaces of the seal housing and the bearing flange are exposed to the temperature of the primary circuit

medium and the inner surfaces simultaneously to the temperature of the seal water. As a countermeasure, newly manufactured, modified seal housings were installed. An information notice was filed giving recommendations regarding inspections for indications in the affected area as part of the next scheduled pump revision. In case of findings, these should be assessed and, where required, the seal housings should be replaced with those of an improved design.

Within the framework of an outage of the Grafenrheinfeld nuclear power plant from March to June 2010, an automated ultrasonic in-service inspection was performed on the nozzle of the main coolant line to the surge line, which revealed a circumferential indication in the rounded connecting area of the thermal sleeve to the safe-end of the nozzle [27]. The indication was fully circumferential and was classified as a relevant finding due to its length and despite its relatively low echo amplitude. Depending on the method, the indication depth measured was between 2 and 2.7 mm. Since possible crack growth could not be excluded, the safe-end was removed, cut and subjected to visual and metallographic examinations. The visual inspection of the removed part revealed that the actual geometry of the connecting area of the thermal sleeve deviated clearly from the specifications of the drawing. Instead of having a radius of 2.5 mm, an almost rectangular groove cross-section was found, superimposed by further geometric discontinuities. The metallographic examination revealed a minute circumferential crack which had apparently formed through fatigue because of changing thermal loads. The location of the crack corresponded with the result of the ultrasonic inspection. The actual maximum depth of this minute crack was, however, clearly below the crack depth determined by means of the ultrasonic inspection. The maximum depth was approximately 0.3 mm in the 0°position. It was assumed that the unexpected geometry contributed to a higher fatigue load and to the overestimation of the crack determined by UT. The plant operator replaced the affected safe-end with a new one during the 2011 plant outage. To prevent recurrence of crack formation, the round area of the replaced part was machined with a lathe in accordance with the specifications of the drawing. The actual safety significance event was limited due to the small depth of the incipient crack. The potential significance of the event is given by the fact that a deviation from the specified geometric form of the round area may lead to an active degradation mechanism with crack growth during operation and such manufacturing defects might not be identifiable in a reliable manner with the available non-destructive test methods. An information notice was filed giving recommendations regarding the non-destructive test sequence and test frequency depending on the review of the documentation of the latest tests performed.

The monitoring systems used in German plants have proved widely effective. They are highly developed and optimised continuously. Based on the results of the monitoring systems, operating procedures have been optimised and technical modifications have been performed to reduce the fatigue load of the components. Both led to an enhancement in safety and availability of the plants. The continuous monitoring also allowed the very early detection of damages. The operating experience concerning TF is positive. Over the last 20 years, around 12 events have occurred in German PWRs, but none in BWRs. Regarding the (generic) safety significance of a TF event, GRS filed information notices with corresponding recommendations on how to handle such an issue and avoid re-occurrence. The operating experience, however, also shows that TF damages cannot be fully excluded despite the installation of a FAMOS, especially in cases where the real component geometry deviates from the drawing that is used to calculate the fatigue load of certain locations.

4.2.6. Japan

Some Japanese BWR and PWR plants have been affected by TF damage caused by temperature fluctuations through the mixing of hot and cold streams at tee junctions. Below are three examples of Japanese operating experience with TF damage:

- Mihama-2 (2-loop PWR), April 1999. The reactor unit was operating at reduced power when it was determined that the drain flow to the containment sump increased. A containment entry revealed a small leakage from the excess let-down piping off reactor coolant loop B (RCS cold leg). The leak had developed on the DN80 excess let-down line of the chemical and volume control system (CVCS). It was subsequently found that there was a through-wall crack of about 7 mm in length on the outside and of about 24 mm in length on the inner surface near the elbow of the excess let-down system piping. The cracked pipe surface showed the features of fatigue damage. It became clear that, at the relevant elbow, in addition to the residual stress generated in the bending process, the repeated thermal stress was generated due to the change of the temperature boundary surface (thermal stratification) between the reactor coolant from the RCS cold leg and the stagnant water in the excess let-down system piping. The corrective action for this event was to shorten the vertical run to about six pipe diameters, so that the turbulence penetration boundary was well into the horizontal run, away from the elbow (Figure 4.15). This avoided thermal cycling at the elbow, and assured that the horizontal run would have a continuous source of heat, eliminating stratification cycling. An elbow with reduced residual stress was used in the replacement.

Figure 4.15. Mihama-2 primary coolant leak

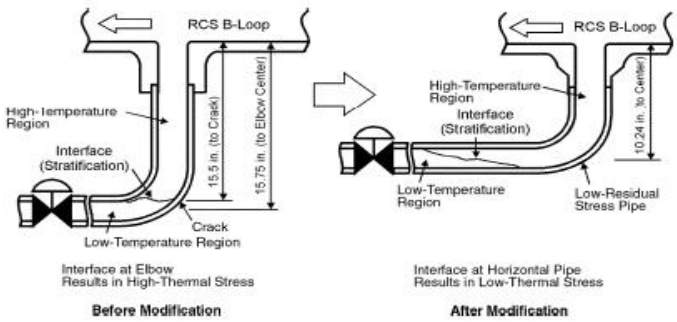

Source: Reproduced from EPRI 10070061 (MRP-25, 2003).

- Tsuruga-2 (4-loop PWR), July 1999. A primary coolant leak was detected at 6.05 am when fire alarms in the passage outside SG compartments C and D were activated. At the same time, another alarm showed a high level in the containment sump followed by an increase in charging flow and an increase in the reading of the containment vessel particulate radiation monitor. A controlled shutdown was started at 6.24 am. When cold shutdown conditions had been reached, radiation levels inside containment began to fall. Engineers entered containment at 18.45 and found a leak at the outlet of one of the regenerative heat exchangers of the CVCS. The leak was stopped by closing an isolation valve and upon removal of insulation from the pipework a through-wall crack was found on an elbow joint (Figure 4.16).

Some 51 m^3 of primary water had leaked from the crack and the water had overflowed the containment sump and flooded the floor to a level of about 5cm. Inspection of the outer surface of the elbow found a longitudinal (running in the direction of the flow) crack about 44 mm long, on the outer surface of the pipe. After the elbow had been removed, a 99 mm crack was found in the corresponding position on the inner surface. The elbow was sent to a laboratory. Visual observations, and dye penetrant and ultrasonic tests showed 3 longitudinal cracks of 151 mm, 100 mm and 72 mm on the inner surface and a 26 mm crack crossing the weld on the upstream side. The 151 mm crack had penetrated the wall for a length of 47 mm. In addition, there were five circumferential cracks in the welds. The fracture surfaces were typical of fatigue cracks with striations (so-called beach marks) indicating that the cracks had grown from the inside surface of the elbow. There was no evidence of stress corrosion cracking or other corrosion problems.

Figure 4.16. Location of primary coolant leakage

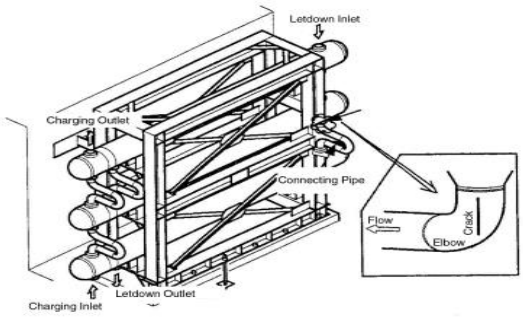

- Genkai-2 (2-Loop PWR), January 2007. With the unit shut down for its twentieth refuelling and maintenance outage, ultrasonic examination of the excess let-down piping revealed a significant flaw in the base metal. The affected pipe section was removed for metallurgical examination and flaw characterisation. The non-through-wall flaw was about 90 mm in length and about 8.1 mm in depth.

In response to this operating experience, the Japan Society of Mechanical Engineers (JSME) published the "Guideline for Evaluation of High-Cycle Thermal Fatigue of a Pipe (JSME S017)," in 2003, which provides procedures and methods for evaluating the integrity of structures with the potential for high-cycle thermal fatigue (HCTF). In JSME S017, one of the important procedures of TF evaluation is to classify the flow patterns at tee junctions, because the degree of TF damage is closely related to the flow pattern downstream of the mixing junction. The conventional characteristic equations for classifying flow patterns are only applicable to 90-degree tee junctions (T-junctions). However, angled tee junctions other than 90 degrees (Y-junctions) are also used in chemical plants and refineries to reduce the pressure drop in the mixing zone and to weaken the force of the impingement of the branch pipe stream against the main pipe.

4.2.7. Korea

During a planned outage at Wolsong unit 4, a through-wall flaw was found on a welded connection of the pressuriser steam bleed valve. On 17 June 2014, at around 10:30am, while the unit was on guaranteed shut down for a planned maintenance outage, a fine through-wall crack was found at the pressuriser side of the welded connection of the pressuriser steam bleed valve (63332-PCV5); see Figure 4.17. The field investigation

revealed that the pipe was locked in because a pipe hanger (PH-29) had not been installed correctly as designed and the operation of the pressuriser steam bleed valve (63332-PCV5) generated repeated thermal loading to the restrained pipe, which caused corrosion-fatigue cracking (CFC) on the weld zone and ultimately through-wall leakage.

Figure 4.17. Pressuriser steam relief valve schematic diagram

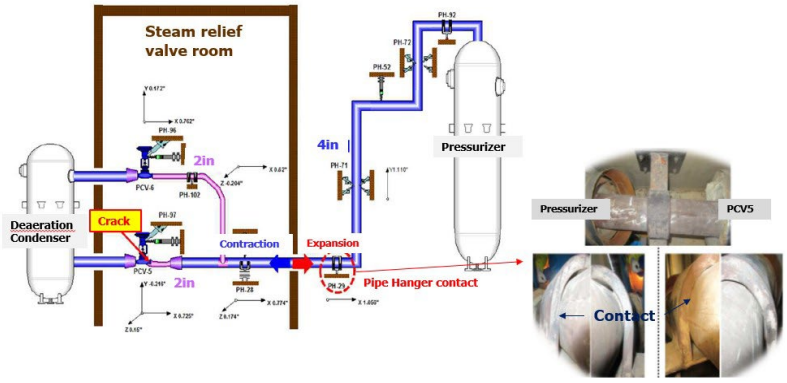

The fracture surface and cross-section analysis showed that the flaw morphology was a typical corrosion-fatigue crack (Figure 4.18). The key damage mechanism was determined to be circumferential CFC, which grew from the inside to outside surface of the welded connection along the boundary between the base and welding metals due to extended exposure to a corrosive environment coupled with the repeated thermal loading from operation of the valve as well as the tensile stress caused by the interference with some of the pipe hanger.

Figure 4.18. Fracture surface analysis results

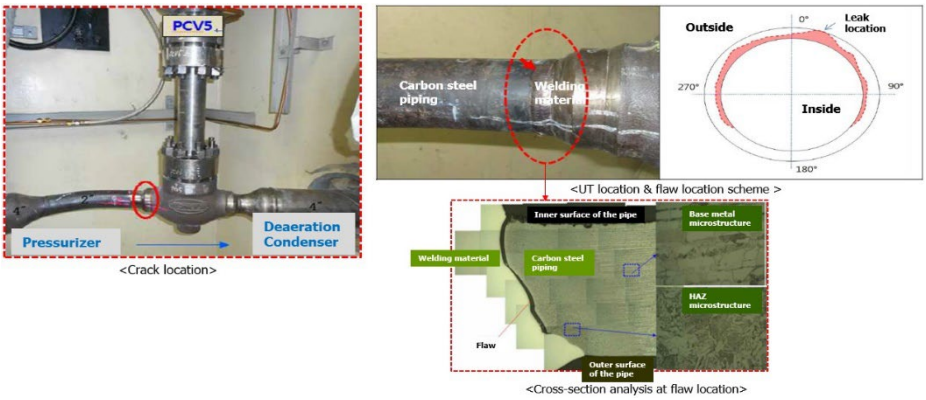

The evaluation of the leak rate from the fine through-wall crack showed that the leaked coolant (about 0.9 kg) was properly recovered as the plant proactively sealed the potential leak points when the increasing trend of the reactor building tritium concentration was noticed. Since there were no meaningful changes in terms of radioactivity level including the tritium concentration in reactor building and the amount of effluent release from the vent, it was concluded that the leakage from the through-wall crack on the welded

connection of the pressuriser steam bleed valve did not cause any safety concerns such as radiological leakage to the environment.

The licensee performed a detailed fracture surface and cross-section analysis to identify the cause(s) of the flaw. It also established a repair work plan based on such analysis to conduct a repair welding onto the flawed location of the steam bleed valve welded connection and corrected the positions of the pipe hangers that were believed to be the contributors to the problem. The licensee performed a post-maintenance NDE testing to determine the integrity of the weld zone. After evaluating the dose received by the workers who participated in the repair welding work and checking the leak location, the licensee confirmed that the internal and external exposure dose as well as the annual cumulative dose of the workers was within the annual dose limit. The investigation team reviewed the licensee evaluation on this matter and found that the licensee conclusion was acceptable.

The licensee, based on its cause evaluation, took the following short-term actions: 1) maintenance on the flawed location of the welded connection, 2) inspection and maintenance on the supports of the reactor coolant pressure and volume control system, and 3) expansion of NDE testing to same type valves and dissimilar weld zones. For longer-term measures, the licensee came up with the following actions: 1) monitoring the behaviour of steam bleed pipe during plant start-up and shutdown, 2) increasing the frequency of ISI for similar locations, 3) replacing steam bleed valves with new valves, 4) periodic monitoring of pipe hangers (PH-28 and PH-29), and 5) establishing a NDE plan for equivalent locations at Wolsong units two and three, as well as inspection of the pipe hangers. The investigation team deemed these short- and longer-term measures to be adequate to prevent recurrence of the event.

4.2.8. The Netherlands

The Netherlands has only one nuclear power plant in operation: a two-loop PWR of German design, located in Borssele. The possible ageing mechanisms of the safety-related components were taken in account in the design phase, with the available knowledge at the time. During the lifetime of the installation, no incidents related to fatigue occurred. There are, however, locations in the power plant where high fatigue loading has been observed, the most relevant being the surge line, affected by TF due to stratification (see Section 4.2.8.1).

In the framework of the LTO assessment project, to extend the lifetime of the installation from 40 to 60 years, a fatigue time-limited ageing analysis (TLAA) project was set up. The study resulted in a list of recommendations:

- Perform further assessments for six locations before the end of 2013 (40th year of operation) to prove that adequate safety margins against crack initiation by fatigue are in place also during LTO. The locations are:
    - secondary outlet nozzle (steam);
    - control volume system/primary system nozzle injection;
    - nozzle of surge line at main coolant line;
    - nozzle of surge line at pressuriser;
    - spray nozzles of the auxiliary spray line;
    - spray nozzles of the spray lines.

- Further assess environmental fatigue at the following three locations before the end of 2013:
  - control volume system/primary system nozzles;
  - surge line;
  - nozzles of the double T-junction.

- Update the load catalogue and load specifications after five operating cycles (Borssele has one-year cycles) of monitoring and revalidate the fatigue analyses that are required by this update.

The operating licence of the Borssele Nuclear Power Plant was changed to grant operation after 2013. A clause was introduced in the licence regarding the monitoring of fatigue: A fatigue-monitoring programme must be in place and the operator must report yearly to the nuclear regulatory authority about the results, news or upcoming trends emerging from the aforementioned programme. According to the licence, the scope of the fatigue-monitoring programme must comprise all relevant safety-related components and structures.

The monitoring of the fatigue transients is carried out via the FAMOS by Framatome GmbH, which was installed in 2010. FAMOS consists of rings of thermocouples on the outside of the pipe measuring the temperature distribution over the circumference of the pipe. The rings are installed on several locations at which temperature differences can be significant; see Figure 4.19. This monitoring of the FAMOS thermocouples is combined with the already existing temperature measurements.

Figure 4.19. The Borssele Nuclear Power Plant FAMOS locations

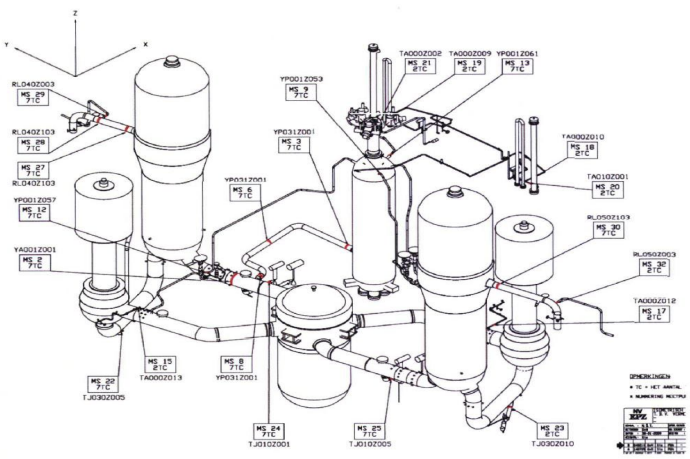

The fatigue calculations for the identified locations are re-evaluated every year, based on the monitoring data. New calculations are performed when needed and the cumulative usage factors (CUFs) are re-evaluated. Environmental fatigue is considered according to the thresholds prescribed in KTA 3201.2 [25].

The use of an online monitoring system like FAMOS allows for an assessment of the change of operating procedures on the fatigue loading, to influence the thermal fatigue-initiating transients in the most sensitive locations.

The fatigue monitoring programme is supervised from the nuclear regulatory authority via the evaluation of the yearly report and taking part in inspections related to the programme.

An example is the ultrasound inspection of the thermal sleeve at the SG nozzle (Figure 4.20). The location where the thermal sleeve connects to the nozzle has a high usage factor. Even if the thermal sleeve has no pressure-retaining function, a NDE was carried out to rule out the presence of possible crack initiation. This examination was carried out during the outage of 2018.

Figure 4.20. SG feed-water nozzle thermal sleeve design

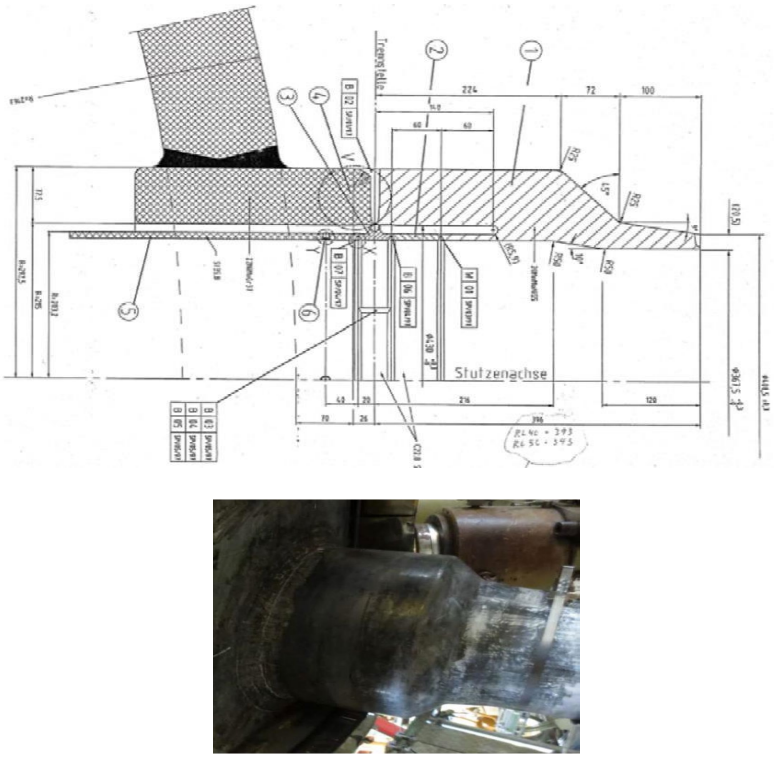

4.2.8.1 Operating experience with the surge line of Borssele Nuclear Power Plant

The surge line of the Borssele Nuclear Power Plant is welded onto loop one of the main coolant line, connecting the main coolant system with the pressuriser. It consists of nine sections that are welded together. The surge line is made of low-alloy ferrite steel with an austenitic stainless steel cladding. The design of the main coolant lines and surge line was generally performed according to the German requirements. Dutch requirements were also used to supplement these requirements in the design of related pressure-retaining components.

In the 1980s, it became clear from international experiences that the phenomenon of fatigue due to stratification was a possible ageing and failure mechanism in the surge line. This mechanism was not taken in account in the original design of the Borssele Nuclear Power Plant. In 1991, thermocouples were temporarily installed on the surge line to be able to detect the temperature changes in the line and the occurrence of stratification.

With the available measurements, Siemens/KWU performed a fatigue calculation. It was assessed that the 40 years of lifetime were still covered from the existing design

assumptions. The start-up and shutdown procedures were, however, changed to reduce the time the line is exposed to high fatigue loading due to stratification.

Thermal stratification may occur in horizontal and slightly sloping parts of the surge line during start-up and shut down. Cooler, denser water from the primary circuit flows under the warmer, lighter water from the pressuriser. The operating temperature is 345°C for the pressuriser and 319.4°C for the hot leg of the main coolant line. Therefore, the temperature difference could be approximately 25°C in the mixing zone during normal power operation in "base load" conditions. During start-up and shutdown, the temperature difference in this area will be significantly higher (approximately 180°C).

As previously specified, in the framework of the LTO project, all the relevant locations for fatigue, including the surge line, were recalculated to estimate the number of cycles, the amplitude of these cycles, and the CUF until 60 years of life. Environmental fatigue was taken in account. The surge line entered the scope of the fatigue-monitoring programme of the Borssele Nuclear Power Plant.

Every year the occurred cycles are compared with the projected ones and the nature of the cycles is compared with the specified one. This makes it possible to assess if the assumptions made in the fatigue calculations cover the transients that actually take place. As of today, no unexpected transient has been registered with FAMOS on the surge line (the last available results are from the 2017 scheduled refuelling outage).

4.2.9. Slovak Republic

Four units are in operation in the Slovak Republic. Two are located at the Bohunice site (units three and four) and two at the Mochovce site (units one and two). Another two units are under construction at the Mochovce site. All six units are of the VVER-440/213 type. Initial evaluation of TF was performed in 2000. In Bohunice three and four, analyses were based on results from FAMOS, which was installed in 1996 on the primary components. In Mochovce one and two, FAMOS was part of the delivery of the primary circuit components (the system was installed before the start of commercial operation in 1998 [Mochovce 1] and 2000 [Mochovce 2]).

Computational analyses revealed high thermal stratification in the pressuriser surge line and SG feed-water nozzle. The maximum number of thermal cycles was observed during the start-up and shutdown of the unit. Mitigation of thermal cycles (stress loads) in SG feed-water nozzles was achieved by modifying the start-up period. Thermal stratification in the pressuriser surge line was mitigated by using medium mixing in the pressuriser with modification of the reactor coolant pump start-up.

In Bohunice, the original FAMOS was replaced with a new system in 2015-2016. The amount of monitored locations was expanded on the pressuriser surge line (Figure 4.21) and SG feed-water nozzles. Several new thermocouples were installed on primary components that had not been monitored before, such as the RHR and emergency core cooling system (ECCS) piping. There are now 118 (367 thermocouples) monitored locations per unit, compared with the 62 locations (106 thermocouples) of the previous FAMOS. TF evaluation methodology was updated by the use of: 1) data from the new FAMOS, 2) new evaluation models with a higher number of computational elements, and 3) computational analyses that are now performed for real operating loads.

Figure 4.21. Thermal fatigue-monitoring of the pressuriser surge line

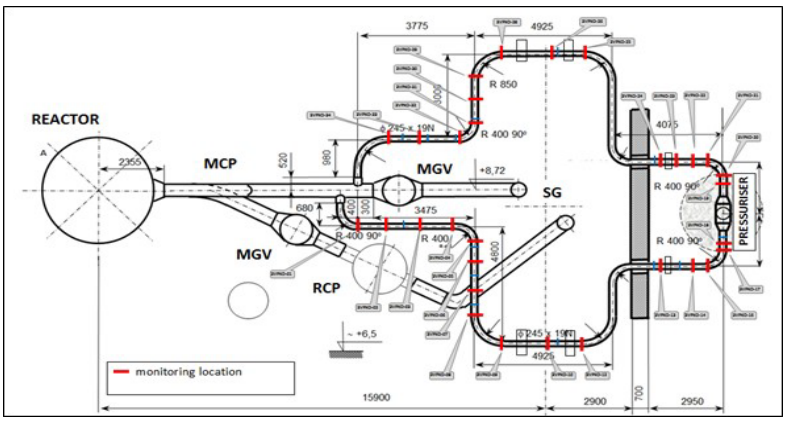

Results from the new evaluation model demonstrate lower stress loads of the evaluated components compared with the previous model. The most stressed components are SG feed-water nozzles. Neither indications of crack development nor any other damage of primary components due to TF (1998 to present) have occurred. Based on the evaluation and current CUF numbers, it can be concluded that the limit acceptance criteria value will not be reached by the end of 60 years of plant long-term operation.

4.2.10. Spain

Spanish nuclear power plants perform TF management through the approved ISI programmes and the AMP.

4.2.10.1 ISI

The Spanish Nuclear Safety Council (CSN) Instruction IS-23 (November 2009) regulates the requirements, development, implementation and management of ISI programmes. As stated in IS-23, Spanish nuclear power plants must carry out their ISI programmes in accordance with the standards defined in the regulations of the country of origin of the technology and accepted in the operating permits, the basic standards applied being section XI of the code of the American Society of Mechanical Engineers (ASME) and the ASME operation and maintenance code (ASME-OM), required by the technical specifications. Consequently, this code is considered an acceptable reference for the drawing up of the ISI and testing programmes defined for these facilities, which are included in the document known as manual of ISI (MISI).

TF susceptibility was not originally considered in the design of the Spanish power plants, all of which stem from the 1970s. A need to manage the TF due to stratification was subsequently recognised during the 1980s and in response to operating experience as documented for example in the US NRC Bulletin 88 “Thermal Stresses in Piping Connected to Reactor Coolant Systems”. Current Spanish PWR nuclear power plant[11] ISI

11. Thermal fatigue has not been considered relevant for BWR plants until now (EPRI through the BWRVIP has just released rev.1 of two documents on this subject, VIP-155 on isolated branches and VIP-195 on T's of mixing, but continue to consider susceptibility analysis as a “Good Practice”).

programmes include consideration of TF management (Inspection for other regulations than ASME XI, additional to that required by Section XI of ASME) based on:

- Bulletin 88-08 "Thermal Stresses in Piping Connected to Reactor Coolant Systems & Supplement 1, 2, 3";
- MRP-192 "Assessment pf RHR Mixing Tee TF in PWR Plants", Rev. 2.

As a consequence of the appearance of cracks in a line of the safety injection system of Farley 2 (United States) produced by thermal stratification due to the entrance of relatively cold water from the leakage through the seat of an isolation valve of the system, and since it could be a generic problem of the plants of similar design, the US NRC collects in Bulletin 88-08 a series of inspection and testing requirements in addition to those required by ASME XI.

As discussed in Bulletin 88-08, the inspection of pipelines susceptible to thermal stratification involves volumetric examinations using qualified ultrasonic procedures (UT) and techniques. The current frequency of inspections is based on the results obtained the first time these procedures and techniques were applied. For example, all selected welds are inspected every five years. Depending on the results obtained, the frequency of future inspections may be modified. For example, due to the NRC Bulletin 88-08, about 16 new areas of the RCS and 2 new areas of the CVCS are inspected. Also included are isolation valves whose leakage through the seat, either in the direction of the safety injection or in the direction of the insulation of the containment, may cause thermal stratification. Currently, seven high-pressure safety injection system (HPSI) valves and two CVCS valves are included in the programme.

MRP-192, Revision-2 describes the incident that occurred in the French plant Civaux-1; see Section 4.2.4 for details. Because of the evaluation of this document, the operators of the Spanish PWR plants have extended the ISI inspection requirements to the following:

- Welds downstream of the "teas" joining the output lines of the RHR heat exchangers and their respective bypass lines.
- Welds located in the section of pipe downstream of the mentioned "teas" up to a distance of four times the nominal diameter of the pipeline.
- Two base metal bands of one inch each, downstream of the connection of the minimum flow recirculation lines of the waste heat removal pumps.

4.2.10.2 Ageing management

The requirements for ageing management in Spanish nuclear power plants are established in safety instruction IS-22, Revision-1 of 15 November 2017 of the nuclear safety council regarding safety requirements for the management of the ageing and long-term operation of nuclear power plants.

The ageing management activities defined in IS-22 are based on the US regulations as formulated in 10 CFR 54 "Requirements for Renewal of Operating Licenses for NPP" and the corresponding implementation guidance documents. Those comprise the "Standard Review Plan for Review of License Renewal Applications for NPP" (NUREG-1800) and the "Generic Ageing Lessons Learned" (NUREG-1801). Based on IS-22, the Spanish plant owners have to perform:

- AMP.XI.M35 "One-Time Inspection of ASME Code Class 1 Small-Bore Piping" based on EPRI 1011955 "Materials Reliability Program: Management of TF in

Normally Stagnant Non-Isolable RCS Branch Lines (MRP-146)", 8 June 2005, and EPRI 1018330 "Materials Reliability Program: Management of TF in Normally Stagnant Non-Isolable RCS Branch Lines – Supplemental Guidance (MRP-146S)", 31 December 2008.

- AMP.XI.M6 (BWR) "BWR Control Rod Drive Return Line Nozzle" is a condition-monitoring programme for BWR control rod drive return line (CRDRL) nozzles that is based on the staff's recommended position in NUREG-0619 for TF.
- AMP.X.M1 "Fatigue-Monitoring" to monitor and track the number of critical thermal and pressure transients for the selected components. The programme also verifies that the severity of the monitored transients is bounded by the design transient definition for which they are classified.
- TLAA "Metal Fatigue" (LTO) (Chapter X NUREG-1801).

4.2.10.3 Fatigue monitoring

Since the 1990s, the Spanish plants have tried different technical approaches to monitoring fatigue. Some plants acquired the "FatiguePro" monitoring system that determines accumulated fatigue and is able to quantify the current remaining margin.[12] The "FatiguePro" applications were terminated in 2006, however. For a limited time the Spanish industry also supported the Euratom "THERFAT" project to simulate, measure and quantify the turbulent fluid flow and associated thermal loads in mixing tees.[13] Currently, the Spanish nuclear power plants use the "FatONE" FAMOS, which automatically detects transients that occur in the plant and that can be identified from the process signals.

4.2.10.4 TLAA of metal fatigue

Fatigue is a degradation mechanism by which the failure in metallic components can occur when they are subject to cyclic loads, even with voltage variation levels lower than the limit stresses corresponding to a static stress. Due to this fact, some design codes, such as the ASME boiler and pressure vessel code and ANSI pipe codes, require explicit fatigue calculations or set design limits that consider this phenomenon.

The origin of the stress cycles on the material of the vessel, pipes and components of the pressure barrier is mainly in the variation of the conditions of pressure and temperature that occurs during operation of the plant. The fatigue processes are developed mainly under two mechanisms:

- Fatigue from a high number of cycles: produced generally by the mixture of fluids at different temperatures, which produces turbulence and therefore thermal variations of small magnitude, but of high frequency (> 103-104). Also identified is fatigue from a high number of cycles of mechanical origin in pipes and in the

12. A detailed description of the methodology is found in: *Stress-Based Fatigue Monitoring: Methodology for Fatigue Monitoring of Class 1 Nuclear Components in a Reactor Water Environment*, EPRI, Palo Alto, CA: 2011, 1022876.

13. For details see NEA/CSNI/R(2007)13: "Assessment of Computational Fluid Dynamics (CFD) for Nuclear Reactor Safety Problems", www.oecd-nea.org/nsd/docs/2007/csni-r2007-13.pdf.

internals of the reactor. The latter is usually caused by vibrations due to the passage of the flow.

- Fatigue from a low number of cycles: generally produced by the thermal and pressure variations of the reactor's refrigerant because of the different modes of operation or transients that take place in the plant. These variations have a large magnitude but occur with a low frequency ($<10^3$ -10^4).

Both NUREG-1800 Rev. 2 and NUREG-1801 Rev. 2 require the analysis of environmentally assisted fatigue (EAF) in ASME Class 1 components during long-term operation, based on the use of an environmental factor that modifies the CUFs calculated with fatigue design curves obtained based on air tests.

4.2.11. Switzerland

All Swiss nuclear power plants utilise instrumentation for fatigue-monitoring. Three of four nuclear power plants use integrated fatigue-monitoring software systems ("FatiguePro", "WESTEMS™" and "FAMOS", respectively) and in one plant, the fatigue assessment is done manually. Enforced by the regulatory guideline ENSI-B01 [28] environmental factors have to be taken into account. An annual report is required. The Swiss nuclear power plants have experienced only a few TF events. The majority of the reported fatigue events are attributed to high-cyclic mechanical vibrations.

In some case high fatigue usage factor have been predicted, which has led to preventive actions. In the Mühleberg Nuclear Power Plant (KKM) a high fatigue usage factor in a T-joint of the Reactor Core Isolation Cooling (RCIC) system due to thermal mixing was identified. In 1997, a double thermo-sleeve was installed. No indications of fatigue cracks were detected by non-destructive testing and the growth of fatigue usage factors was minimised.

In the Gösgen Nuclear Power Plant (KKG) thermal stratifications in the pressuriser surge line were identified. This has caused relatively high fatigue usage factors (lower than 100%) on parts of the pressuriser surge line and pressuriser nozzles. The system was modified in 2005. After the modifications, fatigue loadings were reduced significantly and parts of the surge line with high usage factors were replaced.

4.2.12. Chinese Taipei

TF has been identified as a mechanism that can potentially lead to cracking in lines attached to PWR primary coolant piping. Taipower has six units at three sites. Two of them, Maanshan-1 and Maanshan-2, are Westinghouse 3-loop PWR units. For these units, the TF management program is in full accordance with the EPRI materials reliability programme (MRP) guidelines; refer Table 4.4 to Section 4.2.13 for details.

For investigation and analysis, the geometry, temperature difference between hot and cold water, maximum effective operating time, and leak rate data were collected. After that, the Maanshan Nuclear Power Plant followed MRP-146 to screen potential TF locations and set up an inspection programme in normally stagnant, unisolable RCS branch lines. In addition, MRP-192 was followed to screen locations and set up the same programme for RHR system mixing tees.

The normally stagnant RCS branch lines where geometry and temperature difference met the MRP screening criteria were put on the inspection list even if the leak rates were smaller

than the screening criteria. If the leak rate exceeds the screening criteria, a shortening of the inspecting period should be evaluated.

4.2.12.1 Research and development

At the end of 2009, research began on the Maanshan Nuclear Power Plant's TF issue. In April 2011, hot and cold mixed T pipe thermal fatigue monitoring equipment was set up at the T pipe at the exit of the RHR heat exchanger at Maanshan unit two. Figure 4.22 shows the installation positions of the 12 strain gauges and 12 thermometers, which were installed at 4 different positions on 3 sections. Figure 4.23 shows the stress-over-time and Figure 4.24 is a flow chart that uses the measured data to analyse the degree of TF (the maximum stress amplitude value of > 28.2 ksi is per ASME Section III, Appendix I, Figure A.1. The maximum stress amplitude threshold of > 13.6 ksi is per ASME Section III, Appendix I, Figure A.2.).

Figure 4.22. The positions of the strain gauges and thermometers

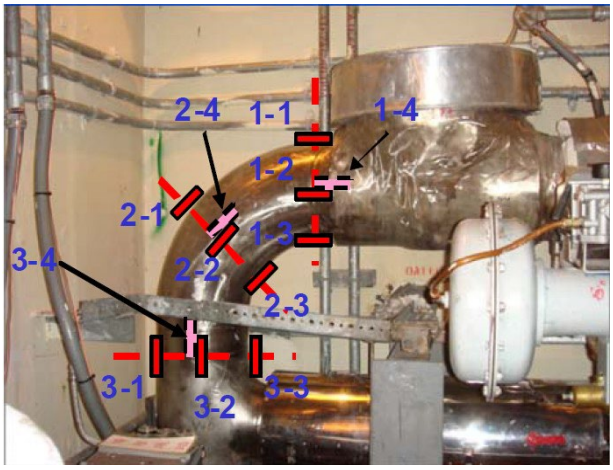

Figure 4.23. Stress over time of the RHR mixing tee

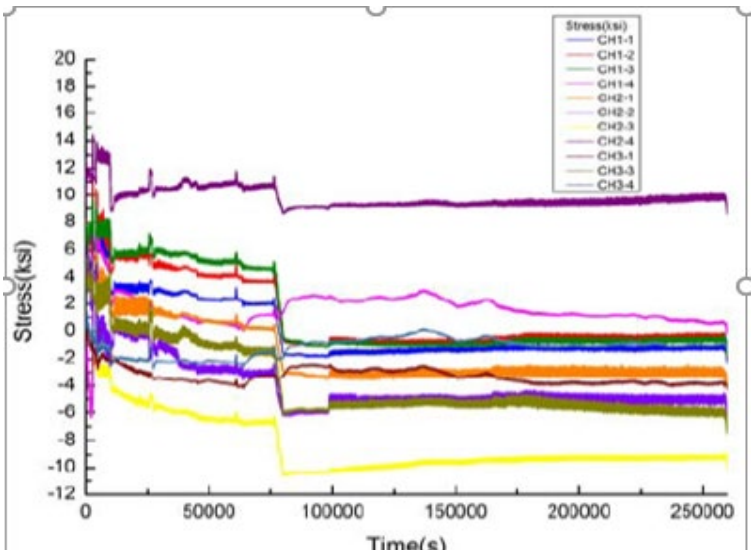

Figure 4.24. Measured data to analyse the degree of TF

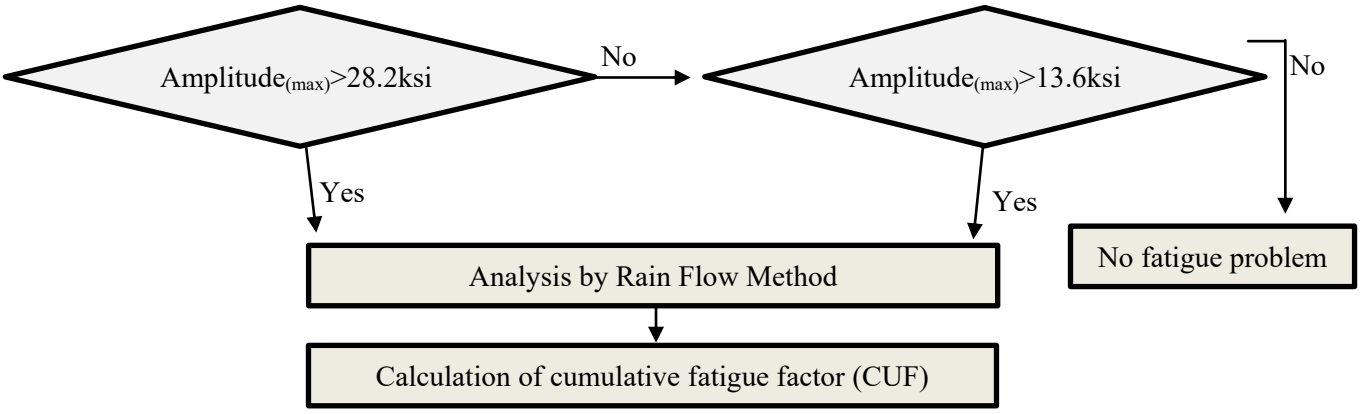

The strain value measured by the strain gauge is converted into a stress value, thereby determining the maximum stress amplitude. If the maximum stress amplitude is greater than 13.6 ksi, the CUF should be calculated by the "rain flow method" (RFM) as described in ASME Section three, Appendix I, Figures I-9.2.1 and Figures I-9.2.2 (the RFM is used in the analysis of fatigue data to reduce a spectrum of varying stress into a set of simple stress reversals. It allows the application of Miner's rule to assess the fatigue life of a structure subject to complex loading.) If the maximum stress amplitude is less than 13.6 ksi, there is no fatigue problem. Because maximum stress amplitude at the T pipe at the exit of the RHR heat exchanger at Maanshan unit 2 was lower than 13.6 ksi, it was determined that there was no TF issue in that pipe.

4.2.13. United States

4.2.13.1 Industry and regulator response to TF management

The US operating experience with TF is summarised in Figure 4.25. Thermal stratification was first identified in 1977 as the root cause for ASME III Code Class 2 feed-water nozzle cracks which occurred at a number of PWR plants. The next industry-wide thermal stratification concern arose at Farley unit 2 in late 1987, because of an unisolable primary system water leak. Subsequently, reports from foreign reactors (e.g. Tihange unit 1 and Genkai unit 1) described similar events. Table 4.3 summarises the NRC regulatory bulletins and information notices related to thermal stratification. References [11] [29] and [30] provide more detailed technical information on TF experience for the period from 1970 to 2000.

Figure 4.25. The US TF operating experience

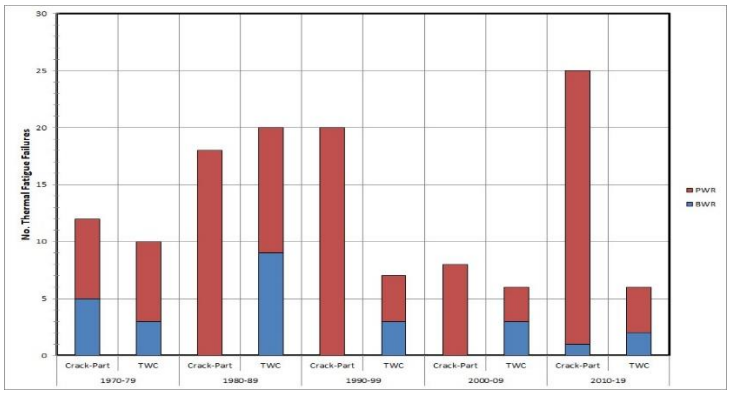

Table 4.3. List of NRC bulletins and information notices related to thermal stratification

Information notice (IN) /bulletin	Subject	Date of Issuance
Bulletin 79-13	Cracking in Feed-water System Piping	10/16/1979
IN 84-87	Piping Thermal Deflection Induced by Stratified Flow	12/3/1984
IN 88-01	Safety Injection Pipe Failure	1/27/1988
Bulletin 88-08	Thermal Stresses in Piping Connected to Reactor Coolant Systems - with two supplements	6/22/1988
IN 88-80	Unexpected Piping Movement Attributed to Thermal Stratification	10/7/1988
Bulletin 88-11	Pressuriser Surge Line Thermal Stratification	12/20/1988
IN 91-28	Cracking in Feed-water System Piping – Closeout of Bulletin 79-13	4/15/1991
IN 91-38	Thermal Stratification in Feed-water System Piping	6/13/1991
IN 93-20	TF Cracking of Feed-water Piping to Steam Generators	3/24/1993
IN 93-62	Thermal Stratification of Water in BWR Pressure Vessels	8/10/1993
IN 97-46	Unisolable Crack in High-Pressure Injection Piping	7/9/1997

The US Nuclear Regulatory Commission issued Bulletin 88-08 “Thermal Stresses in Piping Connected to Reactor Coolant Systems” in response to three TF failures that occurred in unisolable portions of piping systems attached to the reactor coolant loop piping. The failure mechanism was thermal stratification and cycling caused by valve leakage and swirl penetration. In response to Bulletin 88-08, PWR plants inspected susceptible locations, instrumented piping to measure thermal stratification, and made permanent modifications to preclude TF failures. Since the issuance of the bulletin, incidents of unisolable leakage have continued to occur, however. Subsequently, the Electric Power Research Institute (EPRI), via its MRP, developed various TF management guidelines (see Table 4.4). For example, EPRI published MRP-24 as an interim guideline to manage TF issues in nuclear plants.

After the issuance of MRP-24, additional testing and evaluation was performed to better characterise TF. In 2003, the Nuclear Energy Institute (NEI) issued NEI 03-08 to provide guidance on TF management by implementing the requirements in MRP-146 for RCS branch lines and MRP-192 for RHR system mixing tees. These NEI and MRP documents provide “good practice” recommendations for evaluating and inspecting regions where there may be potential for TF cracking. MRP-146 also provides a model for predicting and evaluating thermal cycling for PWR stagnant lines, which has been shown through benchmarking results to be effective in predicting the location of thermal cycling in lines attached to the RCS. In 2009, EPRI issued supplemental guidance to MRP-146 providing revised evaluation guidance for branch piping.

Since 1998, there have been 21 TF events involving US plants [31], 10 of which occurred between 2013 and 2015. In response to these recent events, EPRI formed the Thermal Fatigue Focus Group (TFFG) with the objectives of (1) publishing interim guidance to prevent thermal fatigue degradation from exceeding regulatory limits and (2) identifying actions for programme improvement [31]. The TFFG evaluated the thermal fatigue events between 2013 and 2015 and issued interim guidance in MRP 2015- 019, which included two “good practice” and eight “needed” requirements. Additionally, MRP-146, Revision 2 was issued in 2016 and MRP-192, Revision 3 was issued in 2017, both incorporating the interim guidance issued in MRP 2015-019.

After the release of this guidance, another seven events occurred between 2016 and 2017. The evaluation of these events revealed that further modifications to the 2015 guidance might be needed. Some of the flaws occurred in areas that were not previously considered to be susceptible to TF. A possible new source of in-leakage from safety injection system cross flow was identified. In response, EPRI is collecting temperature and strain data from several plants for analysis and may provide further guidance, if needed.

Table 4.4. Selected EPRI MRP TF R&D and guidelines

Document ID	Title	Year Issued
MRP-23	"NDE Technology for Detection of TF Damage in Piping"	2017 Revision 2
MRP-24	"Interim TF Guideline"	2001
MRP-25	"Operating Experience Regarding TF of Unisolable Piping Connected to PWR Reactor Coolant Systems"	2000
MRP-81	Interim Report on Thermal Cycling Model Development for Representative Unisolable Piping Configurations"	2002
MRP-83	"Lessons Learned from PWR TF Management Training"	2002
MRP-85	"Operating Experience Regarding TF of Piping Connected to PWR Reactor Coolant Systems". The second update includes descriptions of cracking and leakage events as well as related inspection experience collected through February 2017. Also included are results of a survey conducted of BWR plants to test the prior assumption that TF cracking is less of a concern than in PWRs. TF operating experience in CANDU plants has been included as well.	2018 Revision 2
MRP-132	"Thermal Cycling Screening and Evaluation Model for Normally Stagnant Non-Isolable Reactor Coolant Branch Line Piping With a Generic Application Assessment"	2004
MRP-146	"Cyclic Stratification in Non-isolable RCS Branch Lines"	2016 Revision 2
MRP-146S	"Management of TF in Normally Stagnant Non-Isolable RCS Branch Lines -Supplemental Guidance"	2008
MRP-192	"Assessment of RHR Thermal Mixing Tee TF in PWR Plants"	2018 Revision 3
MRP-275	"MRP-146/146S Implementation Survey Summary"	2010
MRP-409	"EDF Assessment of US TF Management and Operating Experience and Development of Recommendations for Guideline Improvement"	2016

4.2.13.2 NRC guidance for addressing TF plant operation beyond 40 years

To address TF for piping and components exposed to LWR environments in the United States, the US Nuclear Regulatory Commission (NRC) issued two documents:

- "Effect of LWR Water Environments on the Fatigue Life of Reactor Materials," NUREG/CR-6909 Revision 1, 2017,
- "Guidelines for Evaluating The Effects of LWR Water Environments in Fatigue Analyses of Metal Components", Regulatory Guide 1.207.

The effects of the environment on fatigue life are addressed by reducing the measured life in air by an environmental fatigue correction factor (Fen). The Fen factor for carbon and low-alloy steels is a function of sulfur content, material temperature, dissolved oxygen and strain rate. The Fen factor for wrought and cast stainless steels and Ni-Cr-Fe alloys is a function of material temperature, dissolved oxygen and strain rate.

To support licence renewal (i.e. plant operation beyond 40 years), in July 2001, the NRC published NUREG-1800 "Standard Review Plan for Review of License Renewal Applications for NPP", and NUREG-1801, "Generic Ageing Lessons Learned (GALL) report, Volumes 1 and 2". To support subsequent licence renewal (i.e. plant operation beyond 60 years), NUREG-2192 "Standard Review Plan for Review of Subsequent License Renewal Applications for NPP", and NUREG-2191 "Generic Ageing Lessons Learned for Subsequent License Renewal (GALL-SLR), Volumes 1 and 2", were published in July 2017. These reports discuss TF issues in nuclear power plants and provide guidance regarding how plant owners should manage TF in piping during the period of extended operation. NUREG-1800 and NUREG 2191 reference industry guidance on managing TF. For example, AMP XI.M35 provides guidance for performing one-time inspections on ASME Class 1 small-bore piping with diameters from NPS-1 to less than NPS-4, and both reports reference MRP-146 and MRP-146S for guidance on determining the locations that

are most susceptible to TF. Both documents also reference NUREG/CR-6909 and RG 1.207 for addressing environmental effects in fatigue applications.

4.2.13.3 ASME code activities

The ASME has been working on several code cases related to environmental fatigue that are used to evaluate TF, as summarised below:

- ASME Code Case N-779 (Ke'-): "alternative rules for simplified elastic-plastic analysis Class 1, Section III Division 1." This code case provides a method to reduce some of the conservatism in calculating the Ke factor in the current simplified elastic-plastic discontinuity analysis in ASME boiler and pressure vessel code, Section III sub-sub-paragraph NB-3653.6. This code case utilises two factors: Kv to account for Poisson's ratio effects, and Kn to account for plastic strain redistribution effects at local discontinuities. The evaluation utilises stress terms that are not directly available from Class 1 stress summary reports.
- Proposed ASME Code Case N-XXX (Ke*): "Alternative Rules for Simplified Elastic-Plastic Analysis Section III, Division 1." This proposed code case is slightly different from CC N-779 but it also provides a method to reduce some of the conservatism in calculating the Ke factor using ASME boiler and pressure vessel code, Section III sub-sub-paragraph NB-3653.6. This code case utilises stress terms that are directly available from Class 1 stress summary reports. The results from this proposed code case may be slightly more conservative compared to CC N-779.
- Proposed ASME Code Case N-884: "Procedure to Determine Strain Rate for Use with the Environmental Design Fatigue Curve Method and the Environmental Fatigue Correction Factor (Fen) Method as part of an Environmental Fatigue Evaluation for Components Analysed per the NB-3200 Rules. Section III, Division 1." The Fen factor is a function of temperature, dissolved oxygen and strain rate. This code case provides a methodology to calculate the strain rate for each applicable transient when the design by analysis approach in NB-3200 is used for Class 1 components.
- Proposed ASME Code Case N-X-0: "Thickness and Gradient Factors for Section III Piping Fatigue Analyses" is under development. This code case addresses two topics: (1) it accounts for the thickness of real components compared to thin laboratory specimens upon which the ASME fatigue S-N data is based and (2) it addresses real stress distributions or gradients through the thickness of real components in addition to the membrane stress component.
- Proposed ASME Code Case N-XYY: "Procedure to Determine Strain Rate for Use with the Environmental Design Fatigue Curve Method and the Environmental Fatigue Correction Factor (Fen) Method as part of an Environmental Fatigue Evaluation for Piping and Valves Analysed per the NB-3600 and NB-3500 Rules, respectively. Section III, Division 1." The Fen factor is a function of temperature, dissolved oxygen and strain rate. This code case provides a methodology for calculating the strain rate for each applicable transient.

5. Conclusions and recommendations

This sixth CODAP topical report focuses on the operating experience with TF in piping systems of commercial nuclear power plants. Through an examination of the operating experience as recorded in the CODAP, the field experience with the post-1998 TF mechanisms is evaluated in order to draw qualitative and quantitative insights about the damage and degradation mechanisms and their potential plant operability and safety impacts.

In the "Specialist Meeting on Experience with TF in LWR Piping by Mixing and Stratification" [NEA/CSNI/R(98)8] [1] it was noted that some deterioration mechanisms related to TF were not considered in the original design of many nuclear power plants. Therefore, this meeting concluded that effective co-operation between the plant designer, plant owner and plant operator is necessary to keep the risk of TF under control and to ensure safe operation.

In 2005, the CSNI Working Group on Integrity and Ageing of Components and Structures (WGIAGE) finalised the work on a review of operating experience, regulatory framework, countermeasures and current research [5]. The group concluded that thermal cycling degradation has the potential to be an important safety and economic issue in all reactor types. It strongly affects the AMP of safety components. The incidents analysed occurred in different systems and countries/economies but fall within three distinct loading modes connected to thermal cycling: a) stratification; b) dead legs and vortex; c) mixing tees. Assessment screening criteria and guidelines were developed to identify potential locations and ISI programmes were modified in many countries/economies to integrate online monitoring and valve leak tests. In addition, some countries/economies adopted design modifications in different systems to avoid TF effects. The corrective actions against TF have been discussed in many international workshops related to the topic.

5.1. Conclusions

It can be seen in Figure 1 that HCF failures form a major part of fatigue events recorded in CODAP. It should be noted that, based on the number of TF failures, especially HCF failures, the number of reported TF events by CODAP participants decreased after the numerous international discussions and led to various projects in this area in the end 1990s.

Based on the corrective actions by CODAP participants as presented in Chapter 4.2 and the results of the above-mentioned international work related to TF [1-5], the following actions can be considered effective in preventing TF failures:

- Screening of locations with a higher risk of stratification based on operating experiences and research results, especially locations with a risk of HCF. For example, Canada, the Czech Republic, France, Finland, Germany, Japan and the United States indicated that identifying most critical locations is an important component of their corrective actions to mitigate TF.
- Design modifications to decrease TF risk could be implemented based on screening. Design changes depend on reactor design and could include, for example, flow

circulation changes to avoid stratification, material changes to avoid quick deterioration, and process and procedure changes to avoid high temperature differences. Canada, France, Finland, the Netherlands and Spain mentioned that adequate preparations and procedures to mitigate TF had not been included in the original design of the plants. Most participants indicated that optimising operating procedures based on operating experiences was an effective method to avoid further fatigue events.

- Conducting online monitoring of critical locations during operation based on detection and screening of critical locations. The monitoring results should be continuously analysed together with results of periodic inspections. Canada, the Czech Republic, Germany, the Netherlands, the Slovak Republic, Spain and Chinese Taipei mentioned the importance of effective online monitoring in their corrective actions of TF events. Finland, France, Spain and Switzerland provided specific monitoring considerations to assess the stratification problems and develop effective corrective actions.
- Developing more precise NDE methods, techniques and procedures for periodic inspections. As part of the event descriptions in Chapter 4.2, Canada, France, Germany, Korea and the United States mentioned improvements in TF crack detection due to the higher effectiveness of inspection programmes. Korea specifically described their work on improving NDE techniques.

5.2. Recommendations

The actions of the NEA CODAP participants represent good practices to prevent TF in nuclear power plants. In addition, the following international actions are recommended:

- Improving the precision of NDE methods, techniques and procedures for periodical inspections. One possibility could be an international benchmark to establish the reliability of detecting existing cracks. The benchmark could include a comparison of the detection techniques, the calibration procedures of the equipment for plant environment, and the ultrasonic examination procedures. This kind of international benchmark is also recommended in reference [6].
- An international workshop on fatigue could be held and include discussion of how to ensure that design procedures and monitoring systems adequately take into account TF and stratification. The workshop could be scheduled during the next five years to look at the possible need for international actions in the area of TF.

References

[1] NEA (1998), "Specialists Meeting on Experience with Thermal Fatigue in LWR Piping Caused by Mixing and Stratification", NEA/CSNI/R(98)8, OECD Publishing, Paris.

[2] NEA (2000), "Proceedings of the International Conference on Fatigue of Reactor Components", NEA/CSNI/R(2000)24, OECD Publishing, Paris.

[3] NEA (2002), "Proceedings of the EPRI/USNRC/OECD International Conference on Fatigue of Reactor Components", NEA/CSNI/R(2003)2, OECD Publishing, Paris.

[4] NEA (2004), "Proceedings of the Third International Conference on Fatigue of Reactor Components", NEA/CSNI/R(2004)21, OECD Publishing, Paris.

[5] NEA (2005), "Working Group on Integrity and Ageing of Components and Structures (WGIAGE) Report on Thermal Cycling in LWR Components in OECD/NEA Member Countries", NEA/CSNI/R(2005)8, OECD Publishing, Paris.

[6] NEA (2015), "Proceedings of the Fourth International Conference on Fatigue of Nuclear Reactor Components", NEA/CSNI/R(2017)2, OECD Publishing, Paris.

[7] Dahlberg, M, I. Bretherton, C. Faidy, M. Church, S. Chapuliot, U. Wilke, N. Taylor, J. Solin, K.F. Nilsson, J. Catalano (2007), *Development of a European Procedure for Assessment of High Cycle Thermal Fatigue in Light Water Reactors: Final Report on the NESC-Thermal Fatigue Project, EUR 22763 EN*, European Commission Joint Research Centre, Institute for Energy, Petten, The Netherlands.

[8] Wåle, J. and P. Ekström (1995), *Crack Characterisation for In-service Inspection Planning - An Update*, SAQ/FoU-Rapport 95/07, SAQ Inspection Ltd., Stockholm, Sweden. https://inis.iaea.org/collection/NCLCollectionStore/_Public/27/028/27028075.pdf.

[9] EPRI (2010), *MRP-146/MRG-146S Implementation Survey Summary Report (MRP-275), 1020975*, Electric Power Research Institute, Palo Alto, CA.

[10] EPRI (2010), *Materials Reliability Program: Proceedings of MRP-146 Supplemental Guidance and Implementation Insights Training (MRP-299), 1022192*, Electric Power Research Institute, Palo Alto, CA.

[11] Shah, V.N., M.B. Sattison, C.L. Atwood, A.G. Ware, G.M. Grant and R.S. Hartley (1998), *Assessment of Pressurised Water Reactor Primary System Leaks (NUREG/CR-6582)*, US Nuclear Regulatory Commission, Washington, DC, United States.

[12] Tregoning, R., L. Abramson and P. Scott (2008), *Estimating Loss-of-Coolant-Accident (LOCA) Frequencies Through the Elicitation Process (NUREG-1829)*, US Nuclear Regulatory Commission, Washington, DC.

[13] Fleming, K.N. and B.O.Y. Lydell (2016), "Insights Into Location Dependent Loss-of-coolant-Accident (LOCA) Frequency Assessment for GSI-191 Risk-informed Applications", *Nuclear Engineering and Design,* Volume 305, pp. 433-450. https://inis.iaea.org/search/search.aspx?orig_q=RN:48060454

[14] Lydell, B. (2017), "A Review of the Progress with Statistical Models of Passive Component Reliability," *Nuclear Engineering and Technology*, Volume 49, pp. 349-359, https://doi.org/10.1016/j.net.2016.12.008.

[15] Berg, H.-P., R. Gersinska and J. Sievers (2009), "Improved Approach for Estimating Leak and Break Frequencies of Piping Systems in Probabilistic Safety Assessment", pp. 69-81.

[16] Yetisir, M. (2008), "Thermal Fatigue in CANDU Stations", Document No. COG-07-4054, CANDU Owners Group Inc., Toronto, Canada.

[17] EPRI (1999), *Revised Risk-informed Inservice Inspection Procedure, EPRI TR-112657, Revision B-A*, Electric Power Research Institute, Palo Alto, CA.

[18] Lafreniere, P., P. O'Regan, M. Rezaie-Manesh and S. Chesworth (2013), *CANDU Owners Group Risk-Informed In-Service Inspection (RI-ISI) Project, PVP 2013-97935, Proc. ASME 2013 Pressure Vessels and Piping Conference, Paris*, American Society of Mechanical Engineering, New York, United States.

[19] Yetisir, M. (2009), "Thermal Fatigue in CANDU Stations" ICONE17-75603, *Proc. 17th International Conference on Nuclear Engineering (ICONE-17)*, American Society of Mechanical Engineering, New York, United States.

[20] Yetisir, M., G. Stevens and S. Robertson (2008), "Management of Component Fatigue in CANDU Stations for Life Extension", Paper ICONE16-48757 Presented at the *16th International Conference on Nuclear Engineering (ICONE-16)*, Orlando, Florida, American Society of Mechanical Engineering, New York, United States.

[21] Scovil, A. and D. Gerber (2011), "PLGS Fatigue Management Program Plan Development", *CNSC CANDU Fatigue Management Programme Development Workshop, 16-17 February 2011*, National Arts Center, Ottawa, Canada, Canadian Nuclear Safety Commission.

[22] Stevens, G., M. Yetisir, A. Scovil, J. Slade (2008), "Monitoring and Managing Component Fatigue at Point Lepreau Generating Station", *Proceedings of the 8th International Conference on CANDU Maintenance*, Canadian Nuclear Society, Toronto, Canada.

[23] Chapuliot, S., C. Gourdin, T. Payen, J.P. Magnaud and A. Monavon (2005), "Hydro-Thermal-Mechanical Analysis of Thermal Fatigue in a Mixing Tee", *Nuclear Engineering and Design*, Volume 235, pp. 575-596, DOI:10.1016/j.nucengdes.2004.09.011

[24] Hakala, J., H. Hänninen and P. Aaltonen (1990), "Stress Corrosion and Thermal Fatigue – Experiences and Countermeasures in Austenitic SS Piping of Finnish BWR Plants", *Nuclear Engineering and Design*, Volume 119, pp. 389-396. https://doi.org/10.1016/0029-5493(90)90179-2

[25] Safety Standards of the Nuclear Safety Standards Commission (KTA) (2017), "Components of the Reactor Coolant Pressure Boundary of Light-Water Reactors: Part 2: Design and Analysis". Revision 2017-11, KTA 3201.2, KTA-Geschaeftsstelle c/o Bundesamt fuer kerntechnische Entsorgungssicherheit (BfE), Germany.

[26] Safety Standards of the Nuclear Safety Standards Commission (KTA) (2016), "Components of the Reactor Coolant Pressure Boundary of Light-Water Reactors, Part 4: In-service Inspections and Operational Monitoring", Revision 2016-11, KTA 3201.4, KTA-Geschaeftsstelle c/o Bundesamt fuer kerntechnische Entsorgungssicherheit (BfE), Germany.

[27] Elmas, M., U. Jendrich, F. Michel, H. Reck, T. Schimpfke, M. Walter and R. Wenke (2013), *Studies on the Effectiveness of Measures to Maintain the Integrity of Pressurized Components in German Nuclear Power Plants: Final Report*, GRS-A-3700 (in German), Gesellschaft für Anlagen und Reaktorsicherheit (GRS) mbH, Cologne, Germany.

[28] Swiss Federal Nuclear Safety Inspectorate (2011), *Ageing Managament Guidelines for Swiss Nuclear Power Plants*, ENSI-B01/d (in German), Brugg, Switzerland. www.ensi.ch/de/dokumente/richtlinie-ensi-b01-deutsch/

[29] Su, N.T. (1990), *Review of Thermal Stratification Operating Experience, AEOD/S902*, Office for Analysis and Evaluation of Operational Data, US Nuclear Regulatory Commission, Washington, DC, United States.

[30] Shah, V.N., A.G. Ware and A.M. Porter (1997), *Review of Industry Efforts to Manage Pressurized Water Reactor Feedwater Nozzle, Piping, and Feedring Cracking and Wall Thinning, NUREG/CR-6456*, US Nuclear Regulatory Commission, Washington, DC, United States.

[31] Crooker, P. (2017), "MRP Thermal Fatigue Program Update," Materials Research and Development Information Exchange Meeting presentation, 23 May 2017 (NRC ADAMS accession number ML17142A005).

[32] US Nuclear Regulatory Commission (2016), "Risk-Informed approach for addressing the effects of debris on post-accident long-term core cooling" Regulatory Guide 1.229.

Annex A OPDE/CODAP Bibliography

OPDE-1. Lydell, B., E. Mathet, and K. Gott, (2002) "OECD Pipe Failure Data Exchange (OPDE) Project: A Framework for International Cooperation in Piping Reliability," *Proc. American Nuclear Society International Topical Meeting on Probabilistic Safety Assessment, Detroit, Michigan, United States.*

OPDE-2. Colligan, A., R. Lojk, J. Riznic, and B. Lydell, (August 2003) "The OECD Pipe Failure Data Exchange Project – Canadian Contribution on Data Validation", Canadian Nuclear Society Bulletin, Vol. 24, No. 3.

OPDE-3. Choi, S.Y. and Y.H. Choi, (2003) *Piping Failure Analysis for the Korean Nuclear Power Piping Including the Effect of In-Service Inspection, Asian Pacific Conference on NDT, APC NDT 2003*, Jeju, Korea.

OPDE-4. Lydell, B., E. Mathet, and K. Gott, (2004) "OECD Pipe Failure Data Exchange Project (OPDE) – 2003 Progress Report," ICONE12-49217, *Proc. ICONE-12: 12th International Conference on Nuclear Engineering, Arlington*, American Society of Mechanical Engineers, New York, United States.

OPDE-5. Colligan, A., R. Lojk, and J. Riznic, (2004) "The OECD Pipe Failure Data Exchange Project – Data Validation on Canadian Plants," *Proc. International Conference on Nuclear Engineering*, pp. 65-70, ICONE12-49273, American Society of Mechanical Engineers, New York, NY.

OPDE-6. Sun, Y.C., H.C. Young, and K.C. Yeon, (2004) "Application of a Piping Failure Database to Some Nuclear Safety Issues in Korea," *Proc. International Conference on Nuclear Engineering*, pp. 175-179, ICONE12-49572, American Society of Mechanical Engineers, New York, NY.

OPDE-7 Fleming, K. N. and B. Lydell, (2004), "Use of Markov Piping Reliability Models to Evaluate Time Dependent Frequencies of Loss of Coolant Accidents," *Proc. ICONE-12, the 12th International Conference on Nuclear Engineering, American Society of Mechanical Engineers, New York, NY.*

OPDE-8. Lydell, B., E. Mathet, and K. Gott, (2004) "Piping Service Life Experience in Commercial Nuclear Power Plants: Progress with the OECD Pipe Failure Data Exchange Project," *Proc. 2004 ASME Pressure Vessels and Piping (PVP) Conference, San Diego, CA 25-29 July 2004.*

OPDE-9. Choi, Y.H., H.J. Kim, S.Y. Choi, and Y.J. Kim, (2004) "Safety Evaluation of Socket Weld Integrity in Nuclear Piping," Key Engineering Materials, 270-273:1725-1730, OECD/NEA, *The OECD/NEA Piping Failure Data Exchange Project, Workshop on Database Applications*, *OPDE/SEC(2004)4, Issy-les-Moulineaux, France*.

OPDE-10. Choi, S. Y., and Y. H. Choi, (2005) "Evaluation of Nuclear Piping Failure Frequency in Korean Pressurised Water Reactors," Key Engineering Materials, Vols. 297-300, pp.1645-1651.

OPDE-11. NEA (2006a.) *OPDE 2006: 2 Coding Guideline (OPDE-CG), OPDE PR01*, OECD NEA, Boulogne-Billancourt, France, France.

OPDE-12. NEA (2006b.) *OPDE Quality assurance program (OPDE-QA), OPDE-PR-02*, OECD NEA, Boulogne-Billancourt, France, France.

OPDE-13. Vglasky, T, A. Blahoianu, B. Lydell, and J. Riznic, (2006) "The OECD Pipe Failure Data Exchange Project – Validation of Canadian Data," ICONE14-89176, Proc. ICONE-14: *14th International Conference on Nuclear Engineering*, Miami, Florida.

OPDE-14. Lydell, B., E. Mathet, and K. Gott, (2006) "OECD Pipe Failure Data Exchange Project: First Term (2002-2005) Results and Insights", *International Conference on Probabilistic Safety Assessment and Management- PSAM 8, New Orleans, Louisiana, 14-19 May 2006.*

OPDE-15. Olsson, A., B. Lydell, and M. Kochenhauer, (2006) Development of a Reliability Data Handbook for Piping Components in Nordic Nuclear Power Plants," *Proc. Int. 8th International Probabilistic Safety Assessment and Management Conference, ASME, New York, NY.*

OPDE-16. Reck, H. and S. Schulz, (2006) "Internationale Betriebserfahrung mit Rohrleitungen in Kernkraftwerken: Fortschritt des OECD Pipe Failure Data Exchange (OPDE) Datenbank Projektes, " MPA Seminar 32, Stuttgart, Germany.

OPDE-17. Choi, Y.H. and S.Y. Choi, (2007) "Socket Weld Integrity in Nuclear Piping under Fatigue Loading Conditions," Nuclear Engineering and Design, 237:213-218.

OPDE-18. Choi, S.Y., and J-E. Yang, (2007) "Flooding PSA by Considering the Operating Experience Data of Korean PWRs," Nuclear Engineering and Technology, 39:215-220.

OPDE-19. Lydell, B. (2007) "The Probability of Pipe Failure on the Basis of Operating Experience, PVP2007-26281, *Proc. 2007 ASME Pressure Vessel and Piping Division Conference, San Antonio, United States*.

OPDE-20. Lydell, B., A. Huerta, and K. Gott, (2007) "Progress with the International Pipe Failure Data Exchange Project: PVP2007-26278, *Proc. 2007 ASME Pressure Vessel and Piping Division Conference, San Antonio, United States*.

OPDE-21. Simonen, F.A., S.R. Gosselin, B. Lydell, and D.L. Rudland, (2007) "Application of Failure Event Data to Benchmark Probabilistic Fracture Mechanics Computer Codes," PVP2007-26373, *Proc. 2007 ASME Pressure Vessel and Piping Division Conference, San Antonio, United States*.

OPDE-22. Lydell, B., and O. Anders, (2008) "Reliability Data for Piping Components in Nordic Nuclear Power Plants "R-Book" Project Phase I" SKI Report 2008:01, Swedish Nuclear Power Inspectorate, Stockholm, Sweden.

OPDE-23. OECD/NEA (2008)"OECD Piping Failure Data Exchange (OPDE) Project, Terms and Conditions for Project Operation 2008-2011", Issy-les-Moulineaux, France.

OPDE-24. Nuclear Energy Agency (2008) "OPDE 2008:1 Coding Guideline (OPDE-CG) & User's Guide", OPDE PR01, Version 05, Issy-les-Moulineaux, France.

OPDE-25. OECD Nuclear Energy Agency (2008) *CSNI Workshop on Risk-Informed Piping Integrity Management, CSNI Working Group on Integrity of Components and Structures (IAGE)*, NEA/SEN/SIN/IAGE(2008)6, Issy-les-Moulineaux, France.

OPDE-26. Pandey, M. (2008) *Piping Failure Frequency Analysis Using OECD/NEA Data*, University of Waterloo, Final Report, CNSC Research and Support Program. Report RSP-0236, February.

OPDE-27. Olsson, A. and B. Lydell, (2008) "Development of a Reliability Data Handbook for Piping Components in Nordic Nuclear Power Plants – Part II", *Proc. 9th International Conference on Probabilistic Safety Assessment and Management 2008*, pp. 8-15.

OPDE-28. Lydell, B., A. Huerta, and K. Gott, (2008) "Characteristics of Damage & Degradation Mechanisms in Nuclear Power Plant Piping Systems," PVP2008-61914, *Proc. 2008 ASME Pressure Vessel and Piping Division Conference*, *Chicago, United States*.

OPDE-29. Yuan, X.X., M.D. Pandey, and J.R. Riznic, (2008) "A Point Process Model for Piping Failure Frequency Analysis using OPDE Data," ICONE16-48078, *Proc. 16th International Conference on Nuclear Engineering ICONE-16, Orlando, Florida, 11-15 May 2008*, American Society of Mechanical Engineers.

OPDE-30. Lydell, B., and J.R. Riznic, (2008) "OPDE – The International Pipe Failure Data Exchange Project," Nuclear Engineering and Design, 238:2115-2123.

OPDE-31. Reck, H. Et al, (2009) Bewertung des Potentials für unentdeckten Schadens-fortschritt an druckführenden Komponenten, GRS-A-3640, Gesellschaft für Anlagen- und Reaktorsicherheit (GRS) mbH, Cologne, Germany.

OPDE-32. Yuan, X. X., M. D. Pandey and J. R. Riznic, (2009) "A Stochastic Model for Piping Failure Frequency Analysis using OPDE Data", *Journal of Engineering for Gas Turbine and Power,* 131, (5), art. 052901, Sept. 2009.

OPDE-33. Riznic, J. (2009) "OECD/NEA Pipe Failure Data Exchange (OPDE) 2002-2008 Status Report", Canadian Nuclear Safety Commission.

OPDE-34. Choi, Y.H. and S.Y. Choi, (2009) "Assessment of Socket Weld Integrity in Piping," J. Loss Prevention in the Process Industries, **22**:850-853.

OPDE-35. Nordic PSA Group (2010) *R-Book: Reliability Data Handbook for Piping Components in Nordic Nuclear Power Plants*, Stockholm, Sweden.[14]

OPDE-36. Olsson, A., V. Hedtjärn Swaling, and B. Lydell, (2010) "Reliability Data Handbook for Piping Components in Nordic Nuclear Power Plants - Part III," Proc. 10th International Conference on Probabilistic Safety Assessment and Management 2010, pp. 2337-2348.

OPDE-37. Grebner, H. *et al.*, (2010) *Development and Test Applications of Methods and Tools for Probabilistic Safety Analyses*, GRS-A-3555, Gesellschaft für Anlagen und Reaktorsicherheit, Cologne, Germany.

OPDE-38. Uwe-Klügel, J., I.P. Dinu, and M. Nitoi, (2010) *Evaluation of LOCA Frequencies Using Alternative Methods*, EUR 24646 EN, Institute for Energy, EU Joint Research Centre, Petten, The Netherlands.

OPDE-39. OECD Nuclear Energy Agency (2011) *EC-JRC/OECD-NEA Benchmark Study on Risk Informed In Service Inspection Methodologies (RISMET)*, NEA/CSNI/R(2010)13, Boulogne-Billancourt, France.

14. Electronic version on CD (includes methodology description, data input/output files and result summaries). For information on the terms and conditions for how to access the restricted R-Book, contact the NPSAG Secretariat; www.npsag.org.

OPDE-40. Lydell, B., A. Huerta, and K. Gott, (2011) "Insights from PSA Applications of the OECD nuclear Energy Agency (OECD/NEA) OPDE Database," Paper #144, *International Topical Meeting on Probabilistic Safety Assessment and Analysis 2011*, pp. 1696-1706.

OPDE-41. Olsson A., V. H. Swaling, and B. Lydell, (2011) "Experiences from Implementation of Updated Reliability Data for Piping Components Using the R-Book," Paper #056, Proc. ANS PSA 2011 *International Topical Meeting on Probabilistic Safety Assessment and Analysis, American Nuclear Society*, *Wilmington, NC, 13-17 March 2011.*

OPDE-42. Lydell B., A. Mosleh, and D. Chrun, (2011) "Enhanced Piping Reliability Models for Use in Internal Flooding PSA," Paper #145, Proc. ANS PSA 2011 *International Topical Meeting on Probabilistic Safety Assessment and Analysis, American Nuclear Society*, *Wilmington, NC, 13-17 March 2011.*

OPDE-43. Cronvall, O., I. Männistö, and K. Kaunisto, (2012) "On Applications Concerning OECD Pipe Failure Database OPDE," Proc. *11th International Probabilistic Safety Assessment and Management Conference and the Annual European Safety and Reliability Conference 2012*, pp. 2891-2901.

OPDE-44. Wood, J., M. Gonzalez, C. Harris, M. Tobin, and K. Coyne, (2012) "Estimating Conditional Failure Probabilities of Observed Piping Degradations," Proc. 11th International Probabilistic Safety Assessment and Management Conference and the Annual European Safety and Reliability Conference 2012, pp. 2870-2875.

OPDE-45. Park, J.S., and Y.H. Choi, (2012) "Application of Piping Failure Database to Nuclear Safety Issues in Korea," International Journal of Pressure Vessels and Piping, 90-91, pp. 56-60.

OPDE-46. OECD Nuclear Energy Agency (2012) *OECD/NEA Piping Failure Data Exchange Project (OPDE), Final Report*, NEA/CSNI/R(2012)16, Issy-les-Moulineaux, France.

CODAP-1. OECD/NEA (2011) "Component Operational Experience, Degradation and Ageing Programme (CODAP), Terms and Conditions for Project Operation, August 2011".

CODAP-2. Lydell, B., A. Huerta, K. Gott, and J. Riznic, (2013) "OECD-NEA CODAP Event Data Project on Passive Component Degradation & Failures in Commercial Nuclear Power Plants", *Proc. Int. Topical Meeting on Probabilistic Safety Assessment and Analysis 2013,* pp. 663-672.

CODAP-3. Coyne, K., M. Tobin, N. Siu, and M. Röwekamp, (2013) "Use of OECD Data Project Products in Probabilistic Safety Assessment," *International Topical Meeting on Probabilistic Safety Assessment and Analysis 2013*, pp. 558-568.

CODAP-4. Lydell, B. (2013) "Incorporation of FAC Considerations in Probabilistic Safety Assessment," *Proc. FAC2013: Conference of Flow Accelerated Corrosion, 21-24 May 2013, Avignon, France*.

CODAP-5. OECD Nuclear Energy Agency (2014) *CODAP Topical Report on Flow-Accelerated Corrosion (FAC) of Carbon Steel & Low Alloy Steel Piping in Commercial Nuclear Power Plants*, NEA/CSNI/R(2014)/6, Issy-les-Moulineaux, France.

CODAP-6. Lydell, B., O. Nevander, K. Gott, and J. Riznic, (2014)"CODAP Project on International Cooperation in the Area of Structural Integrity of NPP", *ASME International Mechanical Engineering Congress & Exposition.*

CODAP-7. Breest, A., K. Gott, B. Lydell, and J.R. Riznic, (2014) "OECD/NEA Multilateral Cooperation in the Area of Structural Integrity & Ageing Management," Paper PBNC2014-025, *Proc. 19th Pacific Basin Nuclear Conference, 24-28 August 2014, Vancouver, British Columbia, Canada*.

CODAP-8. Nevander, O., J. Riznic, K. Gott, and B. Lydell, (2014) "OECD/NEA Component Operating Experience, Ageing & Degradation Project," Paper O-T05-163, *Proc. Fontevraud 8 Conference, 15-18 September, 2014, Avignon, France.*

CODAP-9. OECD Nuclear Energy Agency (2015) *OECD/NEA Component Operational Experience, Degradation & Ageing Program (CODAP): First Term (2011-2014) Status Report*, NEA/CSNI/R(2015)7, Boulogne-Billancourt, France.

CODAP-10. Lydell, B., and C. Castelao, (2015) "CODAP Project Operating Experience Insights Related to Fatigue Mechanisms", *4th International Conference on Fatigue of Nuclear Reactor Components, 28 September-1 October 2015, Seville, Spain.*

CODAP-11. Dragea, T., and J. Riznic, (2015) "The Component Operational Experience Degradation and Ageing Program (CODAP): Review and Lessons Learned (2011-2014)", *23th International Conference on Nuclear Engineering, ICONE23-1001, Chiba, Japan, 17-21 May 2015*.

CODAP-12. Rivet, M., and J. Riznic, (2015) *The Component Operational Experience Degradation and Ageing Program (CODAP) 2014-2015 Status Report* RSP R 144.6, Operational Engineering Assessment Division Report, CNSC, Ottawa, e-docs#4904008, December 2015.

CODAP-13. OECD Nuclear Energy Agency (2015) *CODAP Topical Report on Operating Experience Insights Into Pipe Failures in Electro-Hydraulic and Instrument Air Systems*, NEA/CSNI/R(2015)6, Boulogne-Billancourt, France.

CODAP-14. Rivet, M., and J. Riznic, (2015) *The Component Operational Experience Degradation and Ageing Programme (CODAP) 2014-2015 Status Report*- RSP R 144.6, Operational Engineering Assessment Division, CNSC, e-docs# 4904008, December 2015.

CODAP-15. Rivet, M., K. Cormier, and J. Riznic, (2016) "The Component Experience, Degradation and Ageing Programme (CODAP) Project; Canada's Contributions and Benefits to the Canadian Industry," submitted to the *40th Annual CNS/CNA Student Conference, Toronto, Canada, 19-22 June 2016.*

CODAP-16. Lydell, B., O. Nevander, and J. Riznic, (2016) "Piping Corrosion Risk Management on the Basis of the OECD/NEA CODAP Project Database," RISK16-8327, Proc. Corrosion Risk Management Conference, Houston, TX, May 23-25, 2016, NACE International, Houston, TX, 2016.

CODAP-17. Lydell, B., O. Nevander, and J. Riznic, (2016) "The OECD/NEA CODAP Project & Its Contribution to Plant Ageing Management and Probabilistic Safety Assessment," Paper 062, *Proc. 13th International Conference on Probabilistic Safety Assessment and Management (PSAM13), Seoul, Korea*.

CODAP-18. Lydell, B. (2016) "A Review of the Progress with Statistical Models of Passive Component Reliability," Paper 063, *Proc. 13th International Conference on Probabilistic Safety Assessment and Management (PSAM13), Seoul, Korea*.[15]

CODAP-19. OECD Nuclear Energy Agency (2017) *CODAP Topical Report on Operating Experience Insights Into Pressure Boundary Component Reliability & Integrity Management*, NEA/CSNI/R(2017)3, Boulogne-Billancourt, France.

CODAP-20. Nevander, O., J. Riznic, and B. Lydell, (2018), "The OECD/NEA Contribution to Nuclear Materials Performance Knowledge Preservation," Paper C2018-10530, Proc. NACE Corrosion 2018 Conference, NACE International, Houston, TX.

15. Also published in Nuclear Engineering and Technology (NET), an international journal of the Korean Nuclear Society (KNS): www.sciencedirect.com/science/article/pii/S1738573316303254

Annex B Glossary of technical terms

Backfill. The material used to refill the trench after the pipe and the embedment have been placed.[16]

Backing ring (BR). Used to align two pipe sections before welding and eliminate the need for tack welding. BR pins or nubs automatically set the weld gap.

Bayesian reliability analysis. In the Bayesian approach a subject matter expert develops a well-informed estimate of the probability of failure distribution; the prior state of knowledge. This probability distribution is then updated as more information is collected about the structural integrity of a certain piping system component.

Below-grade piping. Below ground piping with its location given relative to a reference point; e.g. ground level per a plant structure elevation.

Below ground piping. Buried piping in contact with soil or concrete and underground piping that is below grade but is contained within a tunnel or vault such that it is in contact with air and is located where access for inspection is restricted.

BONNA® pipe. A thin steel pipe embedded in reinforced concrete. It has rebar or a heavy wire mesh embedded in the reinforced concrete.

Buried piping. Piping that is below grade and in direct contact with soil. Buried piping is provided with corrosion protection such as coating and cathodic protection.

Cathodic protection (CP). A corrosion protection technique in which the potential difference is applied to buried piping from an external power source or a more anodic material (sacrificial anode) to make the piping behave in a cathodic manner. Using CP, the corrosion rate is normally reduced to an acceptable level.

CFRP system. A buried piping rehabilitation and repair technique. It is comprised of high-strength carbon fibre fabrics and/or glass fibre fabrics, fully saturated in a 2-part 100% solids epoxy matrix. These laminates are bonded both longitudinally and circumferentially to the interior surface of the pipe, forming a structural lining within the pipe. This lining can be designed to replace the degraded portions of the existing system without reliance on the degraded piping for the life of the repair, except at the terminal ends of the repair.

Concrete encased piping (CEP). Below ground, piping that is embedded in concrete. The piping is not easily extracted nor is the interior pipe surface readily accessible for inspection. The CEP category also includes piping recessed in plant building floors.

Crevice corrosion. Crevice corrosion occurs in a wetted or buried environment when a crevice or area of stagnant or low flow exists that allows a corrosive environment to develop in a component. It occurs most frequently in joints and connections, or points of contact

16. For additional details on buried piping backfill refer to: "Pipe Bedding and Backfill," Geotechnical Training Manual No. 7, US Department of the Interior Bureau of Reclamation, Earth Sciences and Research Laboratory, Denver, CO.

between metals and non-metals, such as gasket surfaces, lap joints and under bolt heads. Carbon steel, cast iron, low-alloy steels, stainless steel, copper and nickel base alloys are all susceptible to crevice corrosion. Steel can be subject to crevice corrosion in some cases after lining/cladding degradation.

Cured-in-place-pipe (CIPP). A BP temporary repair method. A resin-saturated felt tube made of polyester, fibreglass cloth or a number of other materials suitable for resin impregnation, is inverted or pulled into a damaged pipe. It is usually done from the upstream access point (manhole or excavation).

Dealloying (selective leaching). As defined by the Association for Materials Protection and Performance (AMPP) (formerly NACE International), "dealloying" or "selective leaching" refers to the selective removal of one element from an alloy by corrosion processes. A common example is the dezincification of unstabilised brass, whereby a weakened, porous copper structure is produced. The selective removal of zinc can proceed in a uniform manner or on a localised (plug-type) scale. It is difficult to rationalise dezincification in terms of preferential Zn dissolution out of the brass lattice structure. Rather, it is believed that brass dissolves with Zn remaining in solution and Cu replating out of the solution. Graphitic corrosion of gray cast iron, whereby a brittle graphite skeleton remains following preferential iron dissolution, is a further example of selective leaching. During cast iron graphitic corrosion, the porous graphite network that makes up 4-5% of the total mass of the alloy is impregnated with insoluble corrosion products. As a result, the cast iron retains its appearance and shape but is weaker structurally. Testing and identification of graphitic corrosion is accomplished by scraping through the surface with a knife to reveal the crumbling of the iron beneath.

Double-walled pipe. A double-walled pipe is a secondary contained piping system. It is a pipe-within-a-pipe, or encased in an outer covering, with an annulus (interstitial space) between the two diameters. The inner pipe is the primary or carrier pipe and the outer pipe is called the secondary or containment pipe.

Epistemic uncertainty. It is scientific uncertainty in the piping reliability model. It is due to limited data (or completeness of the database) and knowledge. The epistemic uncertainty is characterised by alternative models. For discrete random variables, the epistemic uncertainty is modelled by alternative probability distributions.

Equivalent break size (EBS). The calculated size of a hole in a pipe given a certain through-wall flow rate and for a given pressure.

Frazil ice. A collection of loose, randomly oriented needle-shaped *ice* crystals in water that is too turbulent to freeze solid. It resembles slush and has the appearance of being slightly oily when seen on the surface of water.

Fusion (or heat fusion). In the context of high-density polyethylene (HDPE) piping design and installation, fusion techniques are used to join pipes together. It is a welding process used to join two different pieces of a thermoplastic. This process involves heating both pieces simultaneously and pressing them together. The two pieces then cool together and form a permanent bond.

Holiday in pipe coating. A holiday is a hole or void in the coating film, which exposes the buried piping to corrosion.

JRC Operating Experience Clearinghouse (CE-OEF). Located in Petten, Netherlands, the Clearinghouse gathers nuclear safety experts performing the following technical tasks in support to the EU Member States:

- "Topical Studies" providing in-depth assessment of particularly significant events or families of events. These studies are drafted by experts on the topic and based on an analysis of usually hundreds of event reports.
- Trend analysis of events to identify priority areas.
- Improvement of the quality of event reports submitted by the EU Member States to the international reporting system jointly operated by the NEA and the International Atomic Energy Agency (IAEA).
- Reporting every three months the main events that occurred in nuclear power plants.
- Developing a European central Operational Experience OE repository to ensure long-term storage of OE and to facilitate information retrieval.
- Participating in several international co-operation projects on OE, mainly through the IAEA and the NEA working groups.

Limiting Conditions for Operation (LCO). According to the technical specifications[17], an LCO is the lowest functional capability or performance level of a piece of equipment required for safe operation of a nuclear plant. When an LCO cannot be met, the reactor must be shut down or the licensee must follow any remedial action permitted by the technical specifications until the condition can be met.

Pipeline inspection gauge (PIG). In-line PIGs, or smart PIGs, gather information about the pipeline from within. The type of information gathered by smart PIGs includes the pipeline diameter, curvature, bends, temperature and pressure, as well as corrosion or metal loss. PIGs utilise two methods to gather information about the interior condition of the pipeline: magnetic flux leakage (MFL) and ultrasonics (UT). MFL inspects the pipeline by sending magnetic flux into the walls of the pipe, detecting leakage, corrosion or flaws in the pipeline. Ultrasonic inspection directly measures the thickness of the pipe wall by using ultrasonic sounds to measure the amount of time it takes an echo to return to the sensor.

Richardson number (Ri). A dimensionless parameter used in the identification and assessment of locations potentially susceptible to stratification.

Selective leaching. Also referred to as dealloying, demetalification, parting and selective corrosion, selective leaching is a corrosion type in some solid solution alloys, when in suitable conditions a component of the alloys is preferentially leached from the material. The less noble metal is removed from the alloy by a microscopic-scale galvanic corrosion mechanism. The most susceptible alloys are the ones containing metals with high distance between each other in the galvanic series, e.g. copper and zinc in brass.

Techite pipe. Fibreglass (or Fibre Reinforced Polymer) reinforced mortar pipe. This type of piping has found very limited use in cooling tower blowdown/discharge applications. This material can be affected by the environment, becoming brittle or soft, and breaking or leaking.

17. "Betriebshandbuch" in German.

Thermal striping. Incomplete mixing of high temperature and low temperature fluids near the surface of structures with subsequent fluid temperature fluctuations giving rise to TF damage to wall structures.

Tritium. Tritium is a naturally occurring radioactive form of hydrogen that is produced in the atmosphere when cosmic rays collide with air molecules. As a result, tritium is found in very small or trace amounts in groundwater throughout the world. It is also a byproduct of the production of electricity by nuclear power plants. Tritium emits a weak form of radiation, a low-energy beta particle similar to an electron. Tritium radiation does not travel very far in air and cannot penetrate the skin.

Tritium in nuclear power plants. Most of the tritium produced in nuclear power plants stems from a chemical, known as boron, absorbing neutrons from the plant's chain reaction. Nuclear reactors use boron, a good neutron absorber, to help control the chain reaction. Toward that end, boron is either added directly to the coolant water or is used in the control rods to control the chain reaction. Much smaller amounts of tritium can also be produced from the splitting of Uranium-235 in the reactor core, or when other chemicals (e.g. lithium or heavy water) in the coolant water absorb neutrons. Like normal hydrogen, tritium can bond with oxygen to form water. When this happens, the resulting "tritiated" water is radioactive. Tritiated water (not to be confused with heavy water) is chemically identical to normal water and the tritium cannot be filtered out of the water.

Type A sleeve (reinforcing). Used for the repair of non-leaking defects (e.g. pitting, wall thinning) of below ground pipelines. Such a sleeve provides reinforcement for the defective area.

Type B sleeve (pressure containing). A type of steel sleeve used to make pipeline leak repairs. The ends of a Type B sleeve are fillet welded to the carrier pipe.

Unified numbering system (UNS). An alloy designation system in use in North America. It consists of a prefix letter and five digits designating a material composition. For example, a prefix of S indicates stainless steel; C indicates copper, brass or bronze alloys.

Visual examination. The oldest and most commonly used NDE method is Visual Testing (VT), which may be defined as "an examination of an object using the naked eye, alone or in conjunction with various magnifying devices, without changing, altering, or destroying the object being examined." Per ASME XI, there are three different VT methods; VT-1, VT-2 and VT-3.

VT-1 examination. A limited visual examination specific to ASME Section XI which is the observation of exposed surfaces of a part, component or weld to determine its physical condition including such irregularities as cracks, wear, erosion, corrosion or physical damage.

VT-2 examination. Per ASME XI, VT-2 is a visual surface examination to locate evidence of leakage from pressure-retaining components.

VT-3 examination. A limited visual examination specific to ASME Section XI which is intended to determine the general mechanical and structural condition of components and their supports, such as the verification of clearances, settings, physical displacements, loose or missing parts, debris, corrosion, wear, erosion, or the loss of integrity at bolted or welded connections. The VT-3 examinations shall include examinations for conditions that could affect operability of functional adequacy of snubbers, and constant load and spring type supports. The VT-3 examination is intended to identify individual components with significant levels of degradation. As the VT-3 examination is not intended to detect the

early stages of component cracking or other incipient degradation effects, it should not be used when failure of an individual component could threaten either plant safety or operational stability. The VT-3 examination may be appropriate for inspecting highly redundant components (such as baffle-edge bolts), where a single failure does not compromise the function or integrity of the critical assembly.

WEKO-SEAL®. A flexible rubber leak clamp that ensures a non-corrodible, tight seal around the full inside circumference of the pipe-joint area. The design incorporates a series of proprietary lip seals that create a leak proof fit on either side of the joint.

Weldolet. The most common of all branch connections, and is welded onto a larger-diameter pipe. The ends are bevelled to facilitate this process, and therefore the "weldolet" is considered a butt-weld fitting. Weldolets are designed to minimise stress concentrations and provide integral reinforcement.

Yoloy pipe. A high-strength low-alloy steel with enhanced corrosion resistance (ASTM A-714).